AD4028 SERIES

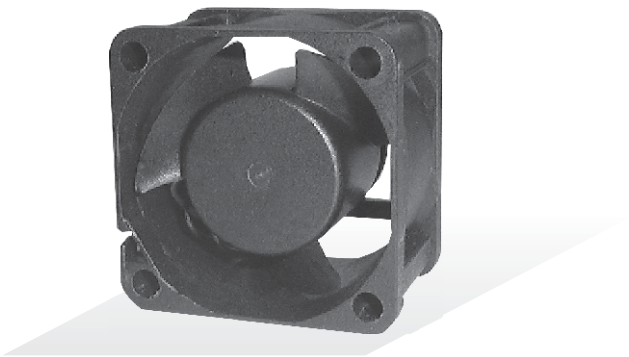

External Dimensions

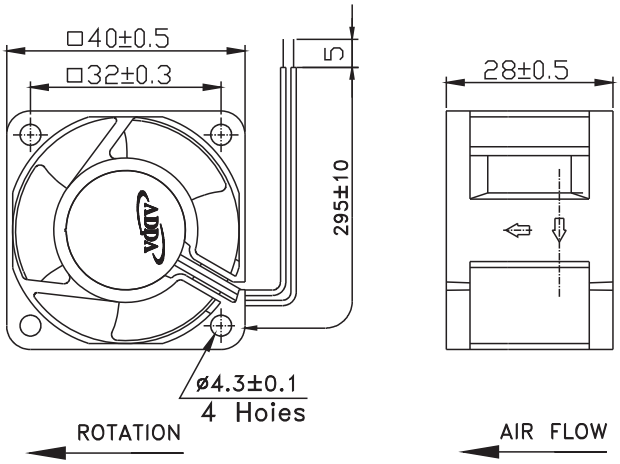

Frame:Plastic(UL:94V-0)
Impeller:Plastic(UL:94V-0)
Lead wire:UL1007AWG26

Specifications(Nominal)

*:Noise is measured at the distance of one (1)meter from the axis of intake.

Bearing type: ◎=Ball ※=Sleeve ○=1B1S ●=Hypro bearing

Frame size (mm)	Model No.	Bearing System Type	Rated Voltage (VDC)	Current (A)	Power (W)	Rated Speed (rpm)	Maximum AirFlow (CMM)	Maximum AirFlow (CFM)	Maximum Pressure (InAq)	Maximum Pressure (mmAq)	*Noise Level (dB/A)	Weight (g)
40x40x28	AD0412DB-B31	◎	12	0.05	0.60	4500	0.166	5.900	0.092	2.336	19.2	38.0
	AD0412LB-B31	◎	12	0.08	0.96	6000	0.217	7.700	0.170	4.318	32.0	
	AD0412MB-B31	◎	12	0.10	1.20	7500	0.271	9.600	0.220	5.588	34.6	
	AD0412HB-B31	◎	12	0.16	1.92	9000	0.345	12.200	0.345	8.763	39.0	
	AD0412UB-B31	◎	12	0.20	2.40	10000	0.370	13.100	0.450	11.430	42.5	
	AD0424HB-B31	◎	24	0.08	1.92	8100	0.305	10.800	0.274	6.959	36.2	

Specifications subject to change without notice.

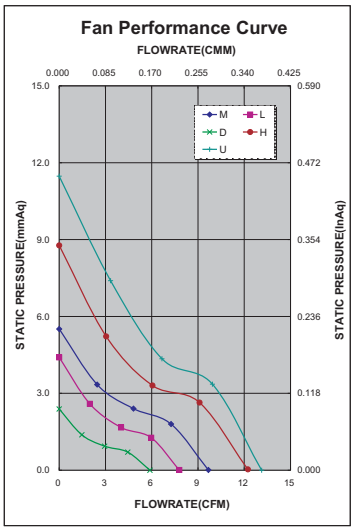

*Motor protective circuit and third lead wire functions

0	1	2	3	4	6	7	8	9	A	B
	✓	✓	✓							

*Safety approvals

UL	cUL	CSA	TÜV Rheinland CERTIFIED	CE
✓	✓		✓	✓

©COPYRIGHT 2008 ADDA CORPORATION.ALL RIGHTS RESERVED. ADDA CORPORATION AND ADDA CORPORATION LOGO ARE TRADEMARKS OR SERVICE MARKS OF ADDA CORPORATION.