NEC

BIPOLAR ANALOG INTEGRATED CIRCUIT

μPC4084

J-FET INPUT QUAD OPERATIONAL AMPLIFIER

DESCRIPTION

The μPC4084, is a quad operational amplifier incorporating well matched ion implant P-channel J-FET on the same chip with standard bipolar transistors. The key features of this op amp is very low input bias current and high slew rate ten times faster than conventional general purpose op amps. By these features μPC4084, is excellent choice for wide variety of applications including integrator, active filter, pulse amp etc.

FEATURES

- Very low input bias and offset currents
- High input impedance...J-FET Input Stage
- High slew rate: 13 V/μs (TYP.)
- Internal frequency compensation
- Output short circuit protection

EQUIVALENT CIRCUIT (1/4 Circuit)

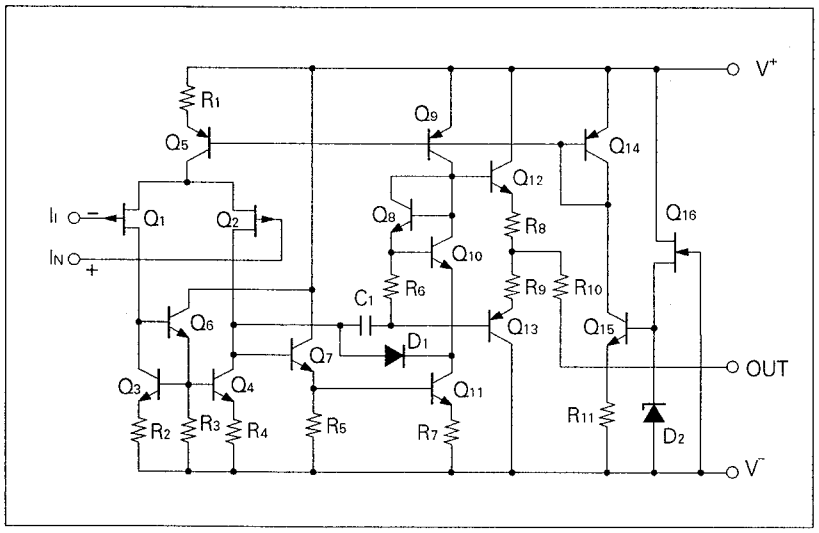

CONNECTION DIAGRAM (Top View)

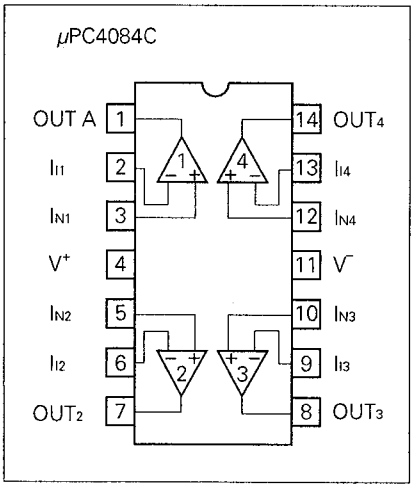

ORDERING INFORMATION

PART NUMBER	PACKAGE	QUALITY GRADE
μPC4084C	14 PIN PLASTIC DIP (300 mil)	Standard

Please refer to "Quality grade on NEC Semiconductor Devices" (Document number IEI-1209) published by NEC Corporation to know the specification of quality grade on the devices and its recommended applications.

Document No.IC-1987A
(O.D. No.IC-5876C)
Date Published March 1993 M
Printed in Japan

ABSOLUTE MAXIMUM RATINGS (T_a = 25 °C)

PARAMETER		SYMBOL	μPC4084	UNIT
Voltage between V^+ and V^-	(Note1)	$V^+ - V^-$	−0.3 to +36	V
Differential Input Voltage		V_{ID}	±30	V
Input Voltage	(Note 2)	V_I	V^- −0.3 to V^+ +0.3	V
Output Voltage	(Note 3)	V_O	V^- −0.3 to V^+ +0.3	V
Power Dissipation C Package	(Note 4)	P_T	570	mW
Output Short Circuit Duration	(Note 5)		Indefinite	sec
Operating Temperature Range		T_{opt}	−20 to + 80	°C
Storage Temperature Range		T_{stg}	−55 to + 125	°C

Note 1. Reverse connection of supply voltage can cause destruction.

Note 2. The input voltage should be allowed to input without damage destruction. Even during the transition period of supply voltage, power on/off etc., this specification should be kept. The normal operation will establish when the both inputs are within the Common Mode Input Voltage Range of electrical characteristics.

Note 3. This specification is the voltage which should be allowed to supply to the output terminal from external without damage or destructive. Even during the transition period of supply voltage, power on/off etc., this specification should be kept. The output voltage of normal operation will be the Output Voltage Swing of electrical characteristics.

Note 4. Thermal derating factor is −7.6 mW / °C when ambient temperature is higher than 50 °C.

Note 5. Pay careful atttention to the total power dissipation not to exceed the absolute maximum ratings, Note 4.

RECOMMENDED OPERATING CONDITIONS

CHARACTERISTIC	SYMBOL	MIN.	TYP.	MAX.	UNIT
Supply Voltage	$V^{\pm}$	± 5		± 16	V

ELECTRICAL CHARACTERISTICS (T_a = 25 °C, $V^{\pm}$ = ±15 V)

CHARACTERISTIC	SYMBOL	MIN.	TYP.	MAX.	UNIT	CONDITION
Input Offset Voltage	V_{IO}		±5.0	±15.0	mV	$R_S \leq 50\ \Omega$
Input Offset Current (Note 6)	I_{IO}		±5	±200	pA	
Input Bias Current (Note 6)	I_B		30	400	pA	
Large Signal Voltage Gain	A_V	25	200		V/mV	$R_L \geq 2$ kΩ, V_O = ±10 V
Supply Current	I_{CC}		8.0	11.2	mA	I_O = 0 A, All Amplifiers
Common Mode Rejection Ratio	CMR	70	76		dB	
Supply Voltage Rejection Ratio	SVR	70	76		dB	
Output Voltage Swing	V_{om}	±12	+13.5		V	$R_L \geq 10$ kΩ
Output Voltage Swing	V_{om}	±10	±12		V	$R_L \geq 2$ kΩ
Common Mode Input Voltage Range	V_{ICM}	±10	+15 −12.7		V	
Slew Rate	SR		13		V/μs	A_V = 1
Unity Gain Frequency	f_{unity}		3		MHz	
Input Equivalent Noise Voltage Density	e_n		25		nV/√Hz	f = 1 kHz, R_S = 100 Ω
Channel Separation			120		dB	
Input Offset Voltage	V_{IO}			±20	mV	$R_S \leq 50\ \Omega$, T_a = −20 to +70 °C
Average V_{IO} Temperature Drift	$\Delta V_{IO}/\Delta T$		±10		μV/°C	T_a = −20 to +70 °C
Input Offset Current (Note 6)	I_{IO}			±5	nA	T_a = −20 to +70 °C
Input Bias Current (Note 6)	I_B			10	nA	T_a = −20 to +70 °C

Note 6. Input bias currents flow into IC. Because each currents are gate leak current of P-channel J-FET on input stage. And that are temperature sensitive. Short time measuring method is recommendable to maintain the junction temperature close to the ambient temperature.

TYPICAL PERFORMANCE CHARACTERISTICS (T_a = 25 °C, TYP.)

POWER DISSIPATION

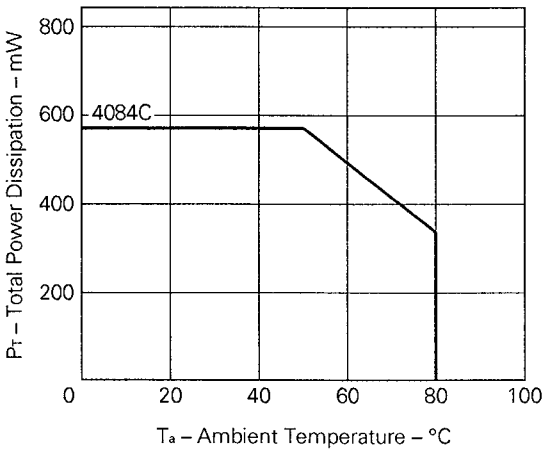

OPEN LOOP FREQUENCY RESPONSE

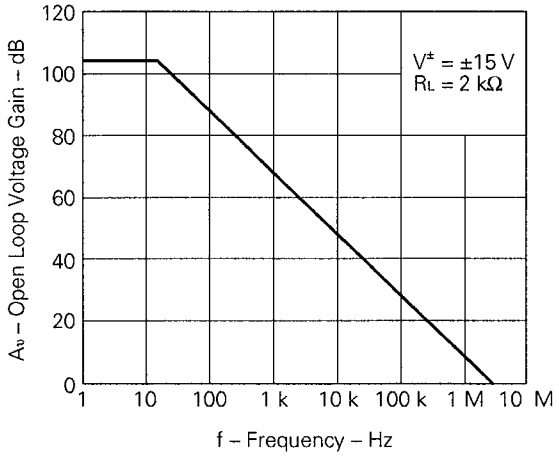

LARGE SIGNAL FREQUENCY RESPONSE

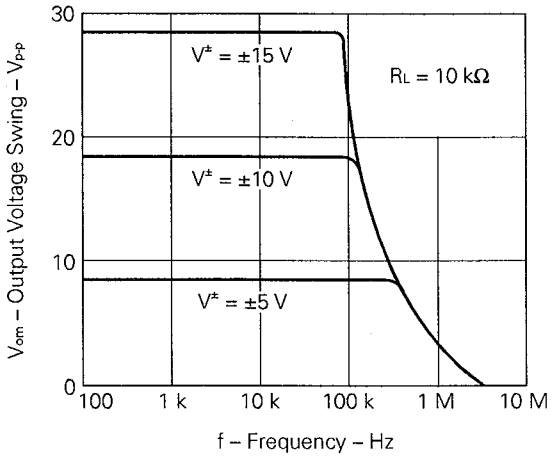

OUTPUT VOLTAGE SWING

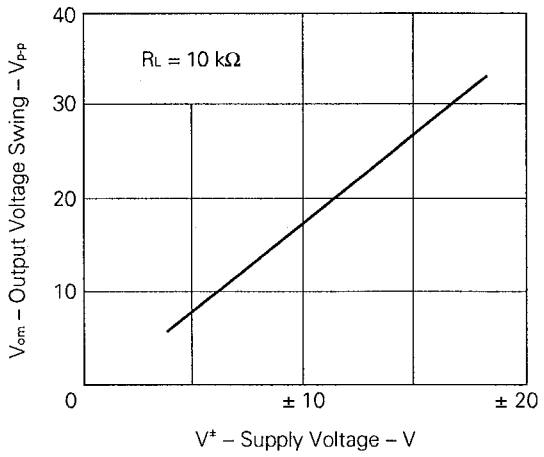

OUTPUT VOLTAGE SWING

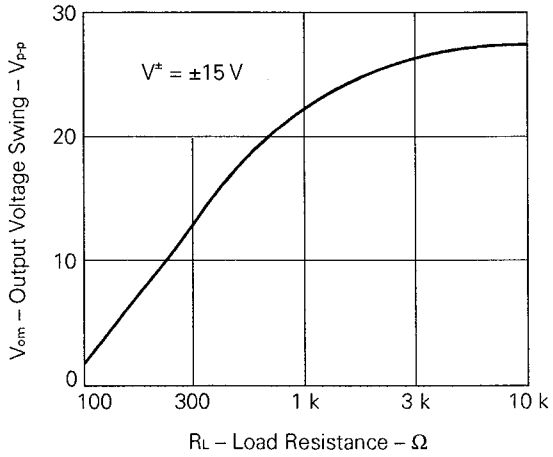

VOLTAGE FOLLOWER PULSE RESPONSE

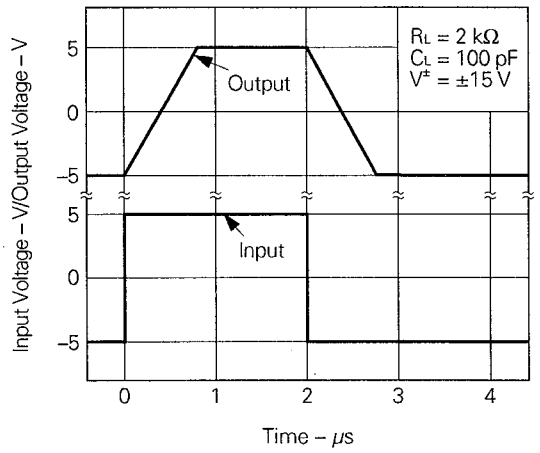

INPUT BIAS CURRENT

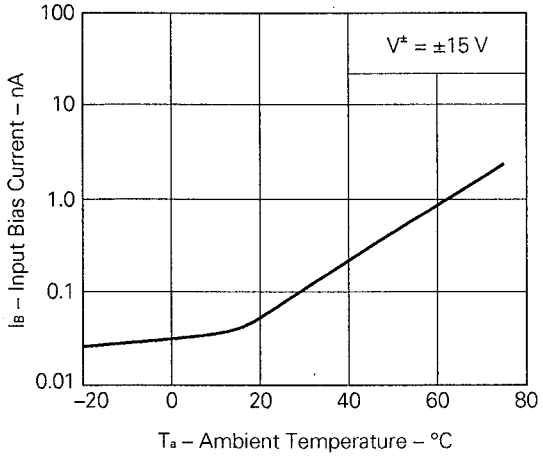

INPUT EQUIVALENT NOISE VOLTAGE DENSITY

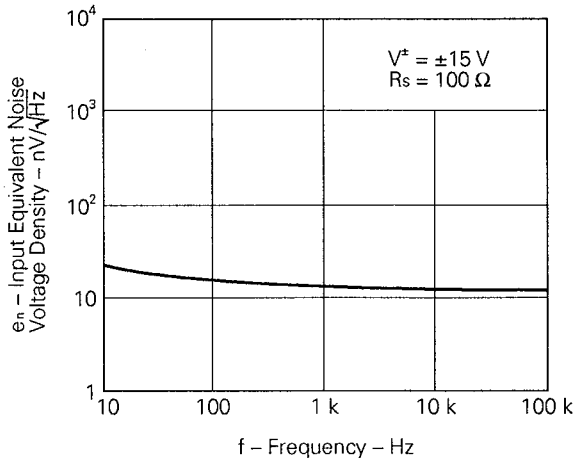

SUPPLY CURRENT

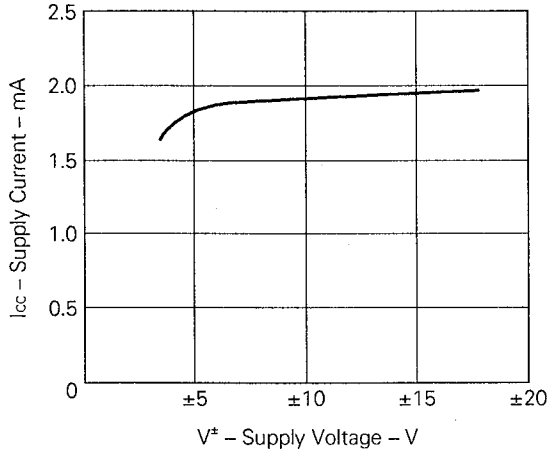

14PIN PLASTIC DIP (300 mil)

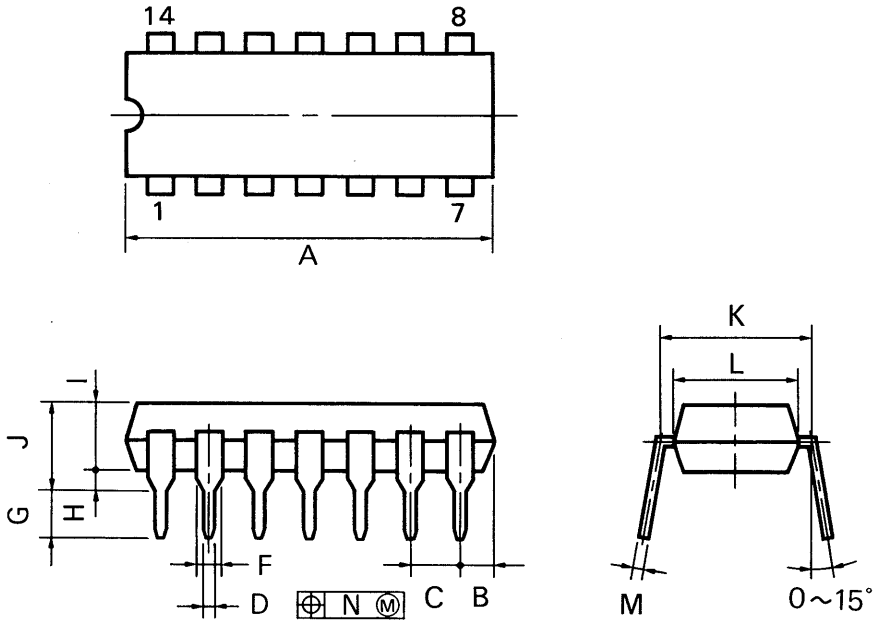

P14C-100-300B1

NOTES

1) Each lead centerline is located within 0.25 mm (0.01 inch) of its true position (T.P.) at maximum material condition.

2) Item "K" to center of leads when formed parallel.

ITEM	MILLIMETERS	INCHES
A	20.32 MAX.	0.800 MAX.
B	2.54 MAX.	0.100 MAX.
C	2.54 (T.P.)	0.100 (T.P.)
D	$0.50^{\pm 0.10}$	$0.020^{+0.004}_{-0.005}$
F	1.2 MIN.	0.047 MIN.
G	$3.6^{\pm 0.3}$	$0.142^{\pm 0.012}$
H	0.51 MIN.	0.020 MIN.
I	4.31 MAX.	0.170 MAX.
J	5.08 MAX.	0.200 MAX.
K	7.62 (T.P.)	0.300 (T.P.)
L	6.4	0.252
M	$0.25^{+0.10}_{-0.05}$	$0.010^{+0.004}_{-0.003}$
N	0.25	0.01

RECOMMENDED SOLDERING CONDITIONS

The following conditions (see table below) must be met when soldering this product.
Please consult with our sales offices in case other soldering process is used, or in case soldering is done under different conditions.

TYPES OF THROUGH HOLE DEVICE

[μPC4084C]

Soldering Method	Soldering conditions	Recommended condition symbol
Wave soldering	Solder temperature: 260 °C or below, Flow time: 10 seconds or below	

[MEMO]

No part of this document may be copied or reproduced in any from or by any means without the prior written consent of NEC Corporation.NEC Corporation assumes no responsibility for any errors which may appear in this document.
NEC Corporation does not assume any liability for infringement of patents, copyrights or other intellectual property rights of third parties by or arising from use of a device described herein or any other liability arising from use of such device. No license, either express, implied or otherwise, is granted under any patents, copyrights or other intellectual property rights of NEC Corporation or others.
The devices listed in this document are not suitable for use in aerospace equipment, submarine cables, nuclear reactor control systems and life support systems. If customers intend to use NEC devices for above applications or they intend to use "Standard" quality grade NEC devices for applications not intended by NEC, please contact our sales people in advance.
Application examples recommended by NEC Corporation.

Standard: Computer, Office equipment, Communication equipment, Test and Measurement equipment, Machine tools, Industrial robots, Audio and Visual equipment, Other consumer products, etc.

Special: Automotive and Transportation equipment, Traffic control systems, Antidisaster systems, Anticrime systems, etc.

M4 92.6