GD75189/A

QUADRUPLE LINE RECEIVERS

Feature

- Input Resistance ... 3kΩ to 7kΩ
- Input Signal Range ... ±30V
- Fully Interchangeable with SN/75189A
- Operates from Single 5-V Supply
- Built-In Input Hysteresis (Double Thresholds)
- Response Control Provides: Input Treshold Shifting
  Input Noise Filtering
- Satisfies Requirements of EIA RS-232-C

Pin Configuration

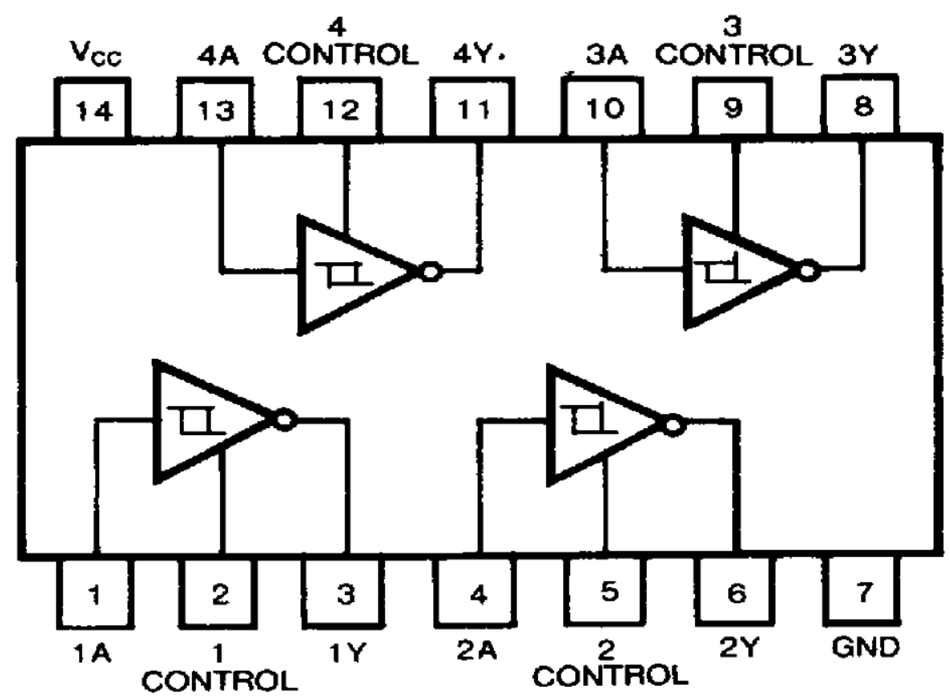

Suffix-Blank. Plastic Dual In Line Package
Suffix-J . Ceramic Dual In Line Package

Description

The GD75189/A is monolithic quadruple line receivers designed to satisfy the requirements of the standard interface between data terminal equipment and data communication equipment as defined by EIA standard RS-232C. A separate response control terminal is provided for each receiver. A resistor or a resistor and bias voltage can be connected between this terminal and ground to shift the input threshold voltage levels. An external capacitor can be connected from this terminal to ground to provide input noise filtering.

Schematics (each gate)

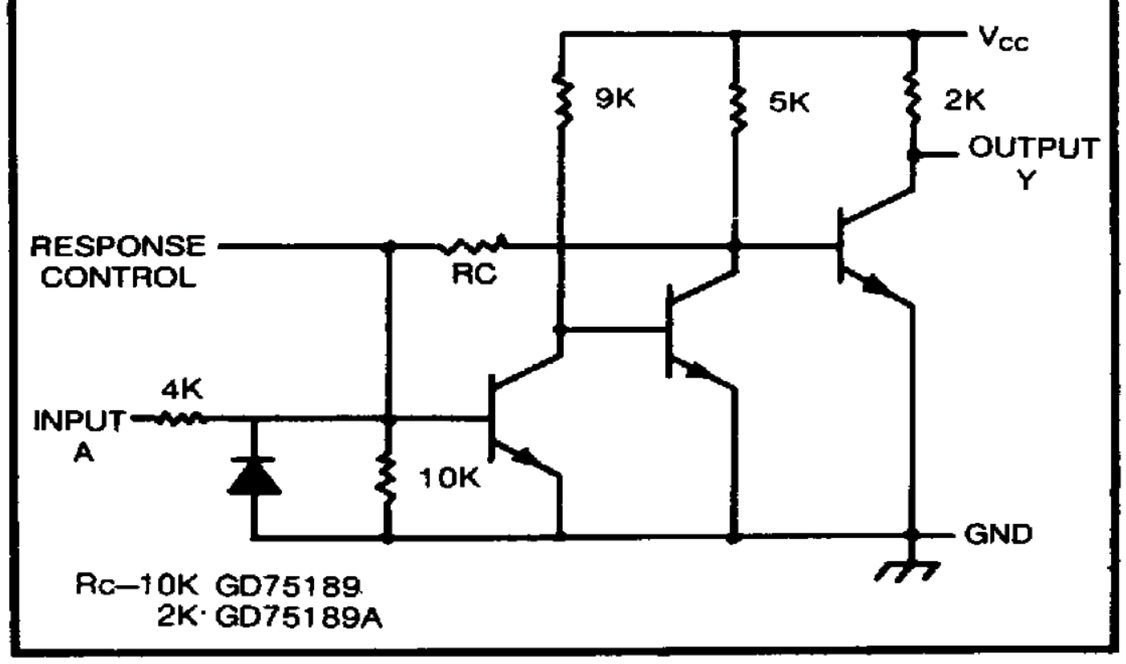

Absolute Maximum Ratings

• Supply voltage	V_{CC}	10V
• Input voltage	V_I	±30V
• Output current	V_O	20 mA
• Continuous total dissipation at (or below) 25°C	P_T	1 W
• Operating free-air temperature range	T_A	0~ 175 °C
• Storage temperature range	T_{STG}	−65~+175°C
• Lead temperature 1/16 inch from case for 60 seconds, J Package		300 °C
• Lead temperature 1/16 inch from case for 10 seconds, P Package		260 °C

Electrical Characteristics over recommended operating free-air temperature range ( ): GD75189A

SYMBOL	PARAMETER	TEST FIGURE	TEST CONDITIONS†	MIN	TYP‡	MAX	UNIT
V_{T+}	Positive-going threshold voltage	1		1(1.75)	(1.9)	1.5(2.25)	V
V_{T-}	Negative-going threshold voltage	1		0.75	0.97	1.25	V
V_{OH}	High-level output voltage	1	V_I=0.75V, I_{OH}=−0.5mA	2.6	4	5	V
			Input open, I_{OH}=−0.5mA	2.6	4	5	
V_{OL}	Low-level output voltage	1	V_I=3V, I_{OL}=10mA		0.2	0.45	V
I_{IH}	High-level input current	2	V_I=25V	3.6		8.3	mA
			V_I=3V	0.43			
I_{IL}	Low-level input current	2	V_I=−25V	−3.6		−8.3	mA
			V_I=−3V	−0.43			
I_{OS}	Short-circuit output current	3			−3		mA
I_{CC}	Supply current	2	V_I=5V, Outputs open		20	26	mA

† All characteristics are measured with the response control terminal open
‡ All typical values are at V_{CC}=5V, T_A=25°C

Switching Characteristics, V_{CC}=5V, T_A=25°C

SYMBOL	PARAMETER	TEST FIGURE	TEST CONDITIONS	MIN	TYP	MAX	UNIT
t_{PLH}	Propagation delay time, low-to-high-level output	4	C_L=15pF R_L=3.9kΩ		25	85	ns
t_{PHL}	Propagation delay time, high-to-low-level output		C_L=15pF, R_L=390Ω		25	50	
t_{TLH}	Transition time, low-to-high-level output		C_L=15pF, R_L=3.9kΩ		120	175	ns
t_{THL}	Transition time, high-to-low-level output		C_L=15pF, R_L=390Ω		10	20	

Parameter Measurement Information

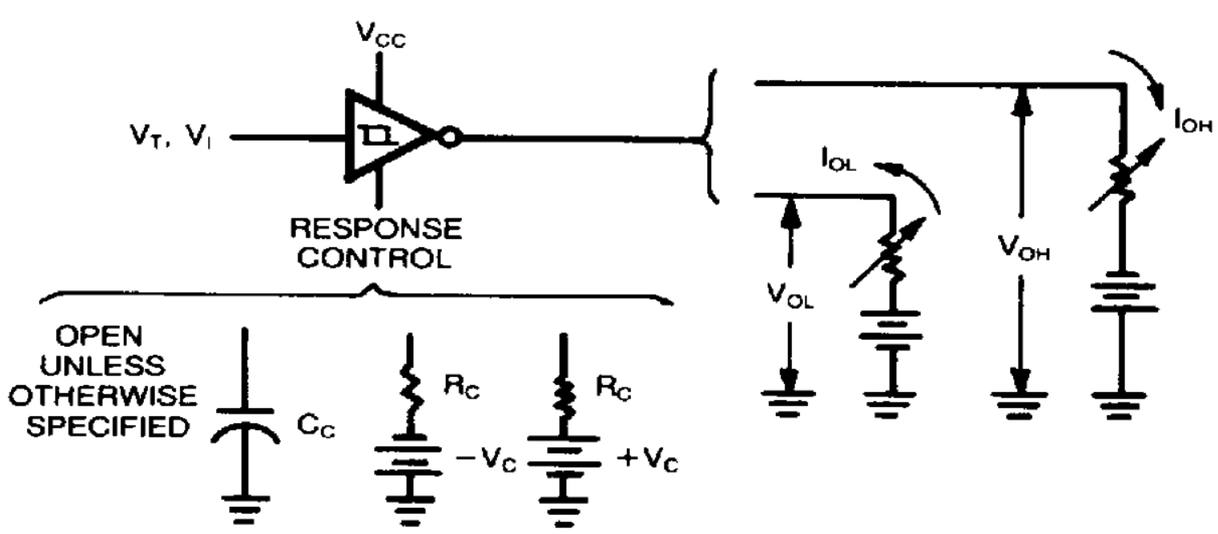

Figure 1 — V_{T+}, V_{T-}, V_{OH}, V_{OL}

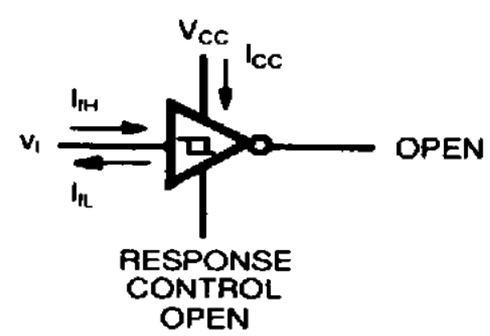

ICC is tested for all four receivers simultaneously

Figure 2 — I_{IH}, I_{IL}, I_{CC}

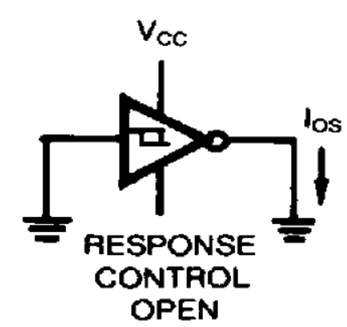

Figure 3 — I_{OS}

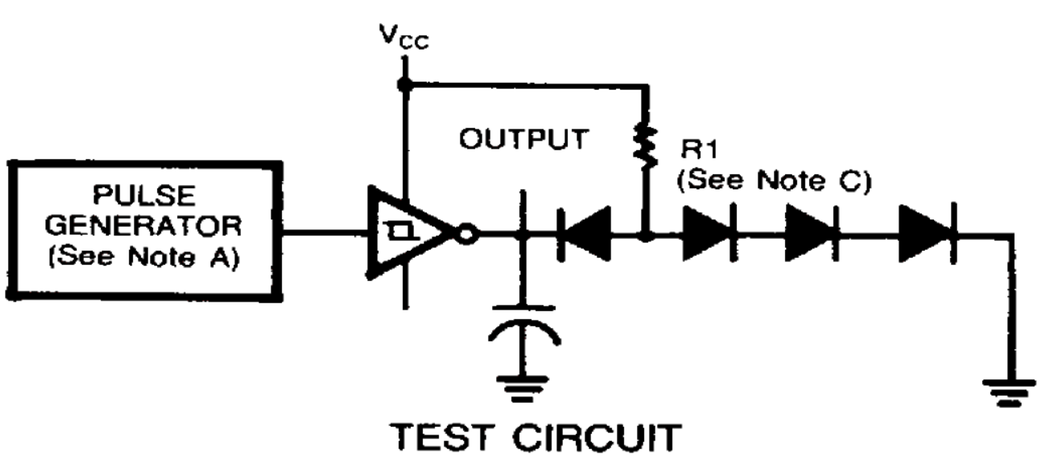

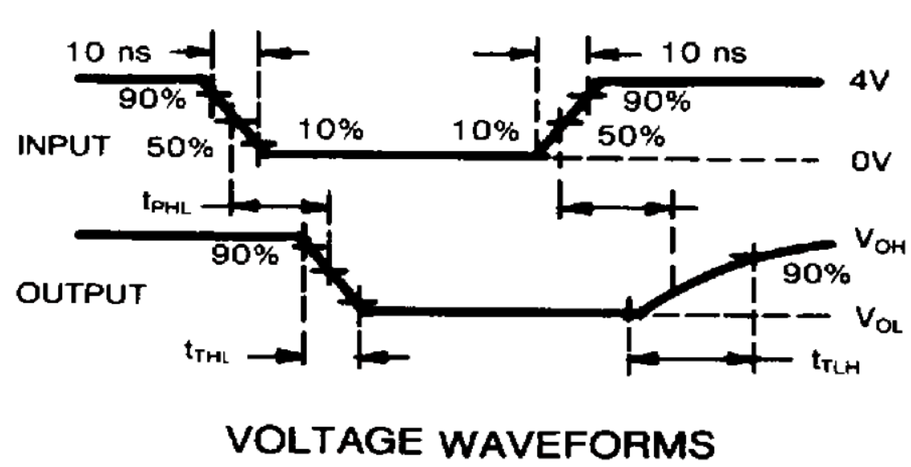

Figure 4 - Switching Times

NOTES A The pulse generator has the following characteristics Z_{OUT} = 50Ω t_w=500ns
B C_L includes probe and jig capacitance
C All diodes are 1N3064 or equivalent

Arrows indicate actual direction of current flow. Current into a terminal is a positive value

Typical Characteristics

GD75189
OUTPUT VOLTAGE vs INPUT VOLTAGE

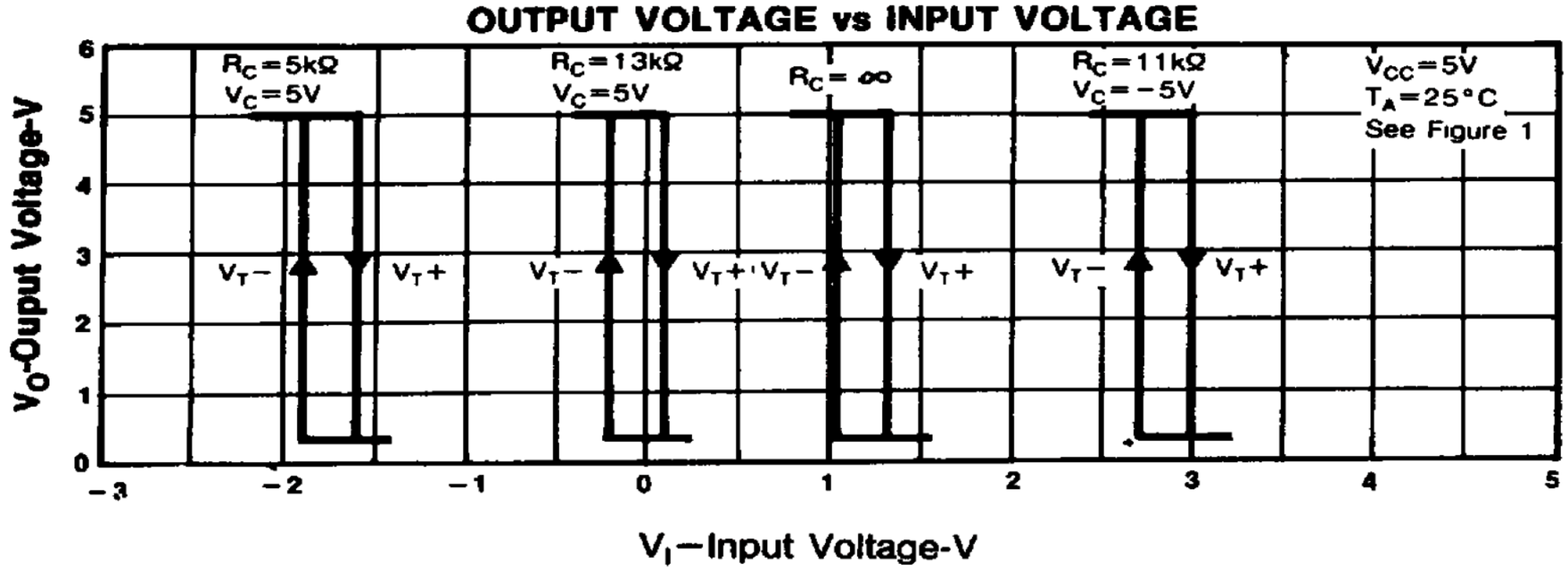

FIGURE 5

GD75189A
OUTPUT VOLTAGE vs INPUT VOLTAGE

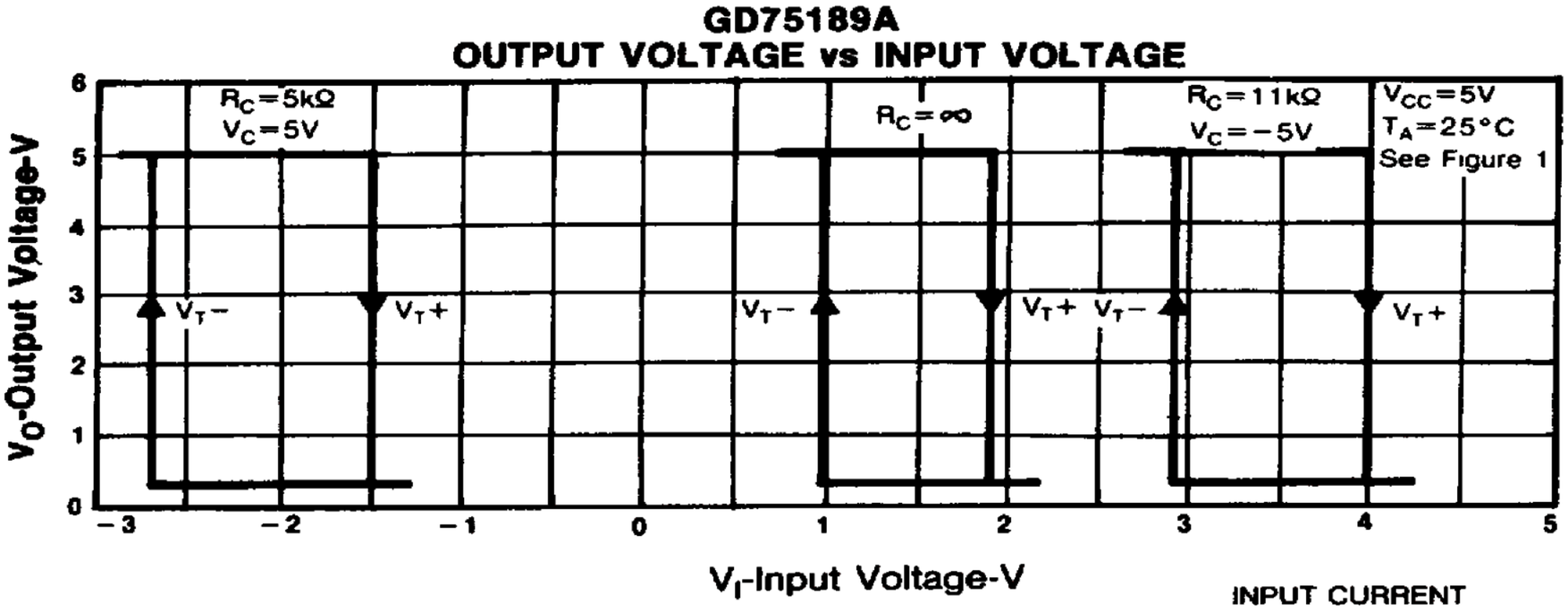

NOISE REJECTION

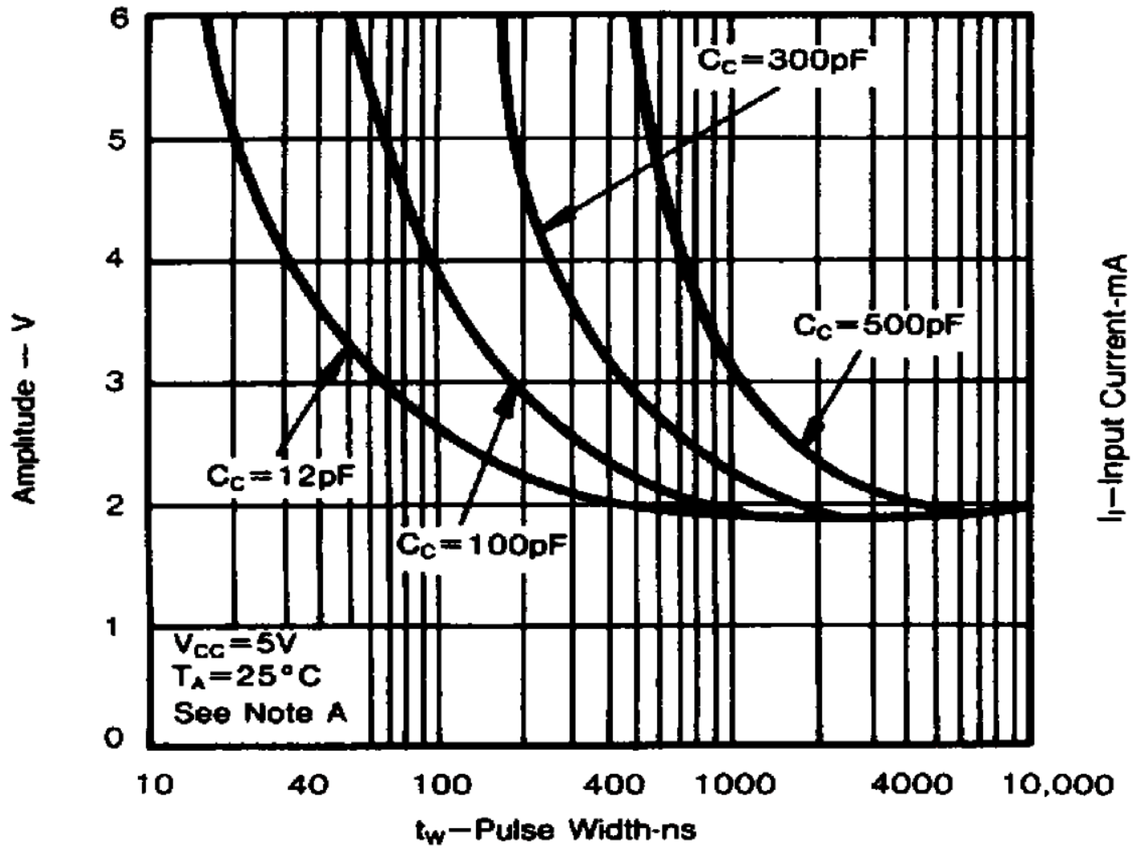

Figure 6

INPUT CURRENT VS INPUT VOLTAGE

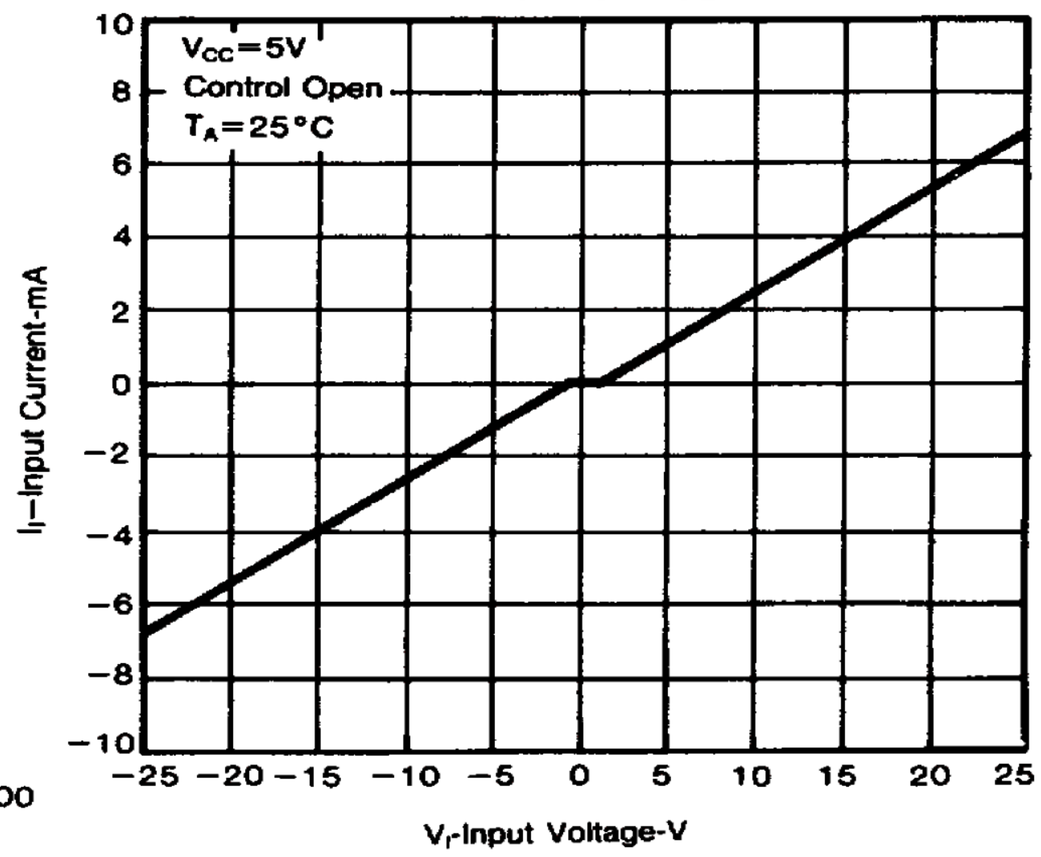

Figure 7

NOTE A This figure shows the maximum amplitude of a positive-going pulse that, starting from zero volts, will not cause a change of the output level