## I² C-BUS INTERFACE REAL TIME CLOCK MODULE

# RTC-8563SA/JE

- Builtin crystal oscillator running at 32.768KHz.
- Compliant with I²C high-speed bus specifications. (400KHz)
- Equipped with alarm, timer, and frequency output (32.768KHz, 1024Hz,32Hz,1Hz) features.
- Inclusion of century bit to enable correct date even after year 2000
- Operating in wide voltage range from 1.8 to 5.5V, and in wide range of clock voltage from 1.2 to 5.5V.
- Low power consumption at 250nA/2.0V. (Typ.)
- Available in small package (SA:SOP14-pin) and thin package (JE:VSOJ20-pin)

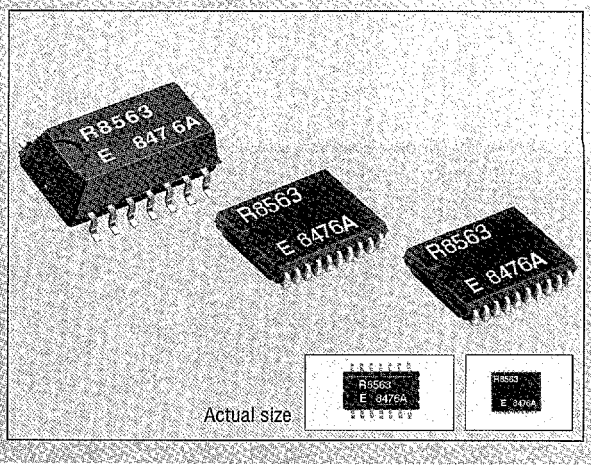


## ■ Specifications (characteristics)

### ■ Absolute Max. rating

| Item | Symbol | Condition | Min. | Max. | Unit |
|---|---|---|---|---|---|
| Supply voltage | $V_{DD}$ | Between $V_{DD}$ and GND | -0.5 | +6.5 | V |
| | $I_{DD}$ | $V_{DD}$ pin | -50 | 50 | mA |
| Input voltage | Vi | Input pin | GND-0.5 | $V_{DD}$+0.5 | V |
| Output voltage | Vo | CLKOUT,$\overline{INT}$ pins | | | |
| DC Input current | Ii | — | -10 | 10 | mA |
| DC Output current | Io | | | | |
| Storage temperature Range | $T_{STG}$ | As single part | -55 | +125 | °C |

### ■ Operating range

| Item | Symbol | Condition | Min. | Max. | Unit |
|---|---|---|---|---|---|
| Supply voltage range | $V_{DD}$ | I²C-BUS access at 400 KHz | 1.8 | 5.5 | V |
| Clock voltage range | | — | $V_{LOW}$ | | |
| Operating temperature range | $T_{OPR}$ | | -40 | +85 | °C |

### ■ Frequency characteristics

| Item | Symbol | Condition | Max. | Unit |
|---|---|---|---|---|
| Frequency precision | Δf/fo | Ta=25°C, $V_{DD}$=3.0V | 5±23 | ppm |
| Frequency temperature characteristics | $T_{op}$ | Ta=+25°C, -10 to +70°C,$V_{DD}$=3.0V | +10 -120 | |
| Frequency voltage characteristics | fv | Ta=+25°C, $V_{DD}$=1.2V to 5.5V | ±2 | ppm/V |
| Oscillation start-up time | $t_{STA}$ | Ta=+25°C, $V_{DD}$=1.8V | 3 | S |
| Aging | fa | Ta=+25°C, $V_{DD}$=3.0V | ±5 | ppm/year |

### ■ DC characteristics

If not specifically indicated, $V_{DD}$=1.8 to 5.5V, Ta=-40 to +85°C

| Item | Pin | Symbol | Condition | Min. | Typ. | Max. | Unit |
|---|---|---|---|---|---|---|---|
| Power current (during access) | — | $I_{DD0}$ | $f_{SCL}$=400 KHz $f_{SCL}$=100 KHz | — | — | 800 200 | μA |
| Power current (not during access) | | $I_{DD}$ | $f_{SCL}$=0 Hz, $V_{DD}$=5.0V $f_{SCL}$=0 Hz, $V_{DD}$=3.0V $f_{SCL}$=0 Hz, $V_{DD}$=2.0V | | 0.35 0.30 0.25 | 0.85 0.75 0.70 | |
| | | $I_{DD32k}$ | $f_{SCL}$=0 Hz, $V_{DD}$=5.0V $f_{SCL}$=0 Hz, $V_{DD}$=3.0V $f_{SCL}$=0 Hz, $V_{DD}$=2.0V | | 0.85 0.55 0.45 | 1.80 1.20 1.00 | |
| "L" input voltage | | $V_{IL}$ | — | GND | — | 0.3×$V_{DD}$ | V |
| "H" input voltage | | $V_{IH}$ | | 0.7×$V_{DD}$ | | VDD | |
| "L" output voltage | SDA | $I_{OL}$(SDA) | $V_{OL}$=0.4V, $V_{DD}$=5V | -3 | | — | mA |
| "L" output current | $\overline{INT}$ | $I_{OL}$($\overline{INT}$) | | -1 | | | |
| | CLKOUT | $I_{OL}$ (CLKOUT) | | | | | |
| Leakage current | — | $I_{LO}$ | $V_O$=$V_{DD}$ or GND | | | 1 | μA |
| Low voltage detection | | $V_{LOW}$ | — | — | 1.0 | 1.2 | V |

The I²C-Bus is a trademark of Philips Electronics N.V.

## ■ Terminal connection

● **RTC-8563SA**

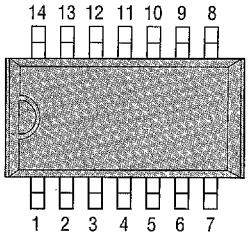


● **RTC-8563JE**

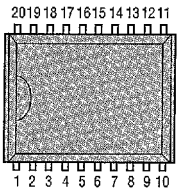


| No. | 8563SA | 8563JE |
|---|---|---|
| 1 | N.C | N.C |
| 2 | SCL | N.C |
| 3 | SDA | N.C |
| 4 | N.C. | $V_{DD}$ |
| 5 | GND | CLKOUT |
| 6 | N.C. | SCL |
| 7 | $\overline{INT}$ | SDA |
| 8 | N.C. | (GND) |
| 9 | N.C. | GND |
| 10 | N.C. | $\overline{INT}$ |
| 11 | $V_{DD}$ | N.C |
| 12 | N.C. | N.C |
| 13 | N.C. | N.C |
| 14 | CLKOUT | N.C |
| 15 | | N.C |
| 16 | | N.C |
| 17 | | N.C |
| 18 | | N.C |
| 19 | | N.C |
| 20 | | N.C |

## ■ External dimensions

(Unit: mm)

● **RTC-8563SA** (SOP 14-pin)

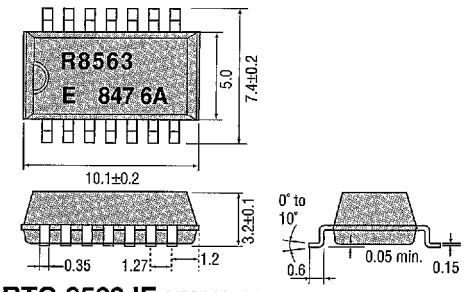


● **RTC-8563JE** (VSOJ 20-pin)

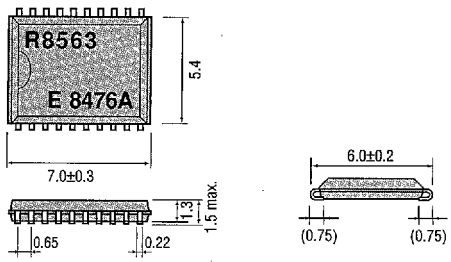

## ■ Register table

| Address | Register symbol | bit 7 | bit 6 | bit 5 | bit 4 | bit 3 | bit 2 | bit 1 | bit 0 |
|---|---|---|---|---|---|---|---|---|---|
| 0 | Control1 | TEST | 0 | STOP | 0 | TEST | 0 | 0 | 0 |
| 1 | Control2 | 0 | 0 | 0 | TI/TP | AF | TF | AIE | TIE |
| 2 | Sec | VL | S 40 | S 20 | S 10 | S 8 | S 4 | S 2 | S 1 |
| 3 | Min | * | Min 40 | Min 20 | Min 10 | Min 8 | Min 4 | Min 2 | Min 1 |
| 4 | Hour | * | * | Hour 20 | Hour 10 | Hour 8 | Hour 4 | Hour 2 | Hour 1 |
| 5 | Day | * | * | Day 20 | Day 10 | Day 8 | Day 4 | Day 2 | Day 1 |
| 6 | Week | * | * | * | * | * | W 4 | W 2 | W 1 |
| 7 | Month/Century | C | * | * | Month 10 | Month 8 | Month 4 | Month 2 | Month 1 |
| 8 | Year | Year 80 | Year 40 | Year 20 | Year 10 | Year 8 | Year 4 | Year 2 | Year 1 |
| 9 | Minutes Alarm | AE | A-Min 40 | A-Min 20 | A-Min 10 | A-Min 8 | A-Min 4 | A-Min 2 | A-Min 1 |
| A | Hours Alarm | AE | A-Hr 40 | A-Hr 20 | A-Hr 10 | A-Hr 8 | A-Hr 4 | A-Hr 2 | A-Hr 1 |
| B | Day Alarm | AE | * | A-Day 20 | A-Day 10 | A-Day 8 | A-Day 4 | A-Day 2 | A-Day 1 |
| C | Week Alarm | AE | * | * | * | * | A-W 4 | A-W 2 | A-W 1 |
| D | CLKOUT frequency | FE | * | * | * | * | * | FD1 | FD0 |
| E | Timer control | TE | * | * | * | * | * | TD1 | TD0 |
| F | Timer | 128 | 64 | 32 | 16 | 8 | 4 | 2 | 1 |

0 : Always set this bit to"0".

## ■ Switching characteristics

If not specifically indicated, $V_{DD}$=1.8 to 5.5V, Ta=-40 to +85°C

| Item | Symbol | Min. | Max. | Unit |
|---|---|---|---|---|
| SCL clock frequency | $f_{SCL}$ | — | 400 | KHz |
| Tolerance spike time on bus | $t_{SW}$ | | 50 | ns |
| Start condition set-up time | $t_{SU;STA}$ | 0.6 | — | μs |
| Start condition Hold time | $t_{HD;STA}$ | | | |
| SCL "L" time | $t_{LOW}$ | 1.3 | | |
| SCL "H" time | $t_{HIGH}$ | 0.6 | | |
| SCL and SDA rise time | $t_r$ | — | 0.3 | |
| SCL and SDA fall time | $t_f$ | | | |
| Date set-up time | $t_{SU;DAT}$ | 100 | — | ns |
| Date hold time | $t_{HD;DAT}$ | 0 | | |
| Stop condition set-up time | $t_{SU;STO}$ | 4.0 | | μs |

## ■ Timing chart

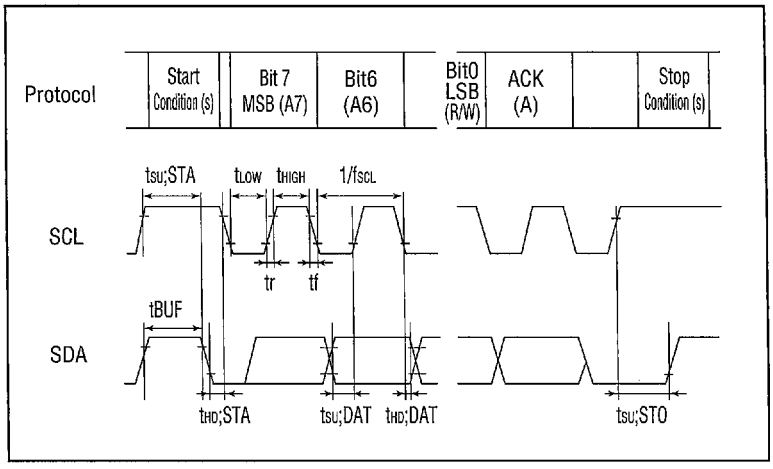

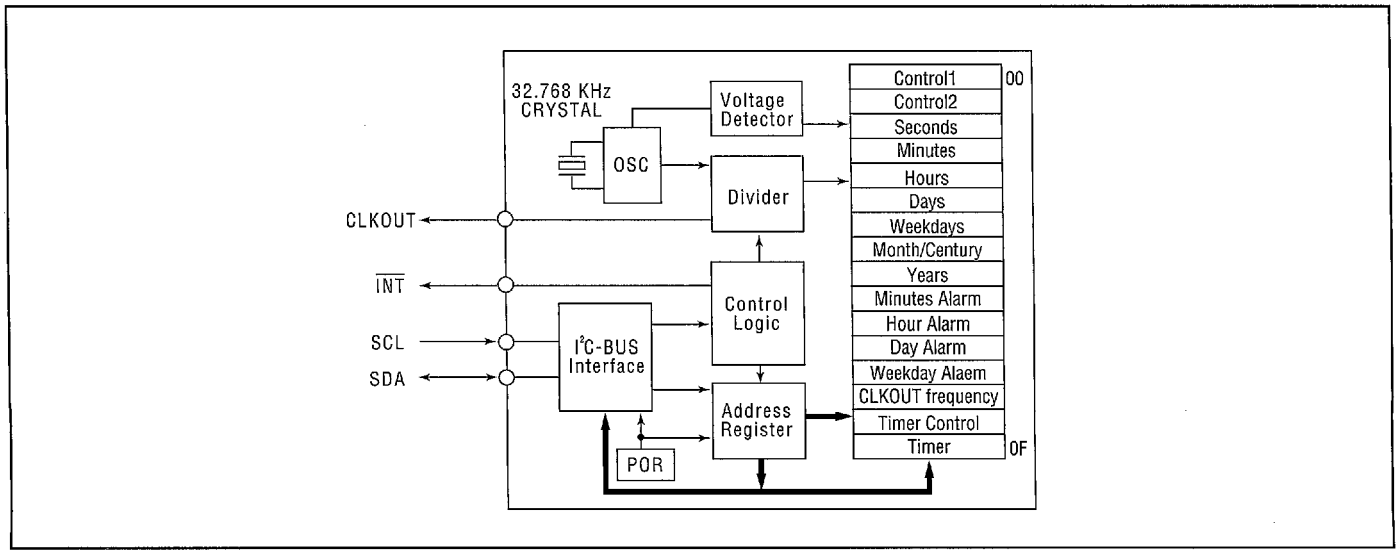
## ■ Block diagram