19-0915; Rev 0; 5/96

MAXIM

CMOS Micropower Step-Up Switching Regulator

General Description

Maxim's MAX630 and MAX4193 CMOS DC-DC regulators are designed for simple, efficient, minimum size DC-DC converter circuits in the 5 milliwatt to 5 watt range. The MAX630 and MAX4193 provide all control and power handling functions in a compact 8 pin package: a 1.31V bandgap reference, an oscillator, a voltage comparator, and a 375mA N-channel output MOSFET. A comparator is also provided for low battery detection.

Operating current is only 70μA and is nearly independent of output switch current or duty cycle. A logic level input shuts down the regulator to less than 1μA quiescent current. Low current operation ensures high efficiency even in low power battery operated systems. The MAX630 and MAX4193 are compatible with most battery voltages, operating from 2.0V to 16.5V.

The devices are pin compatible with the Raytheon bipolar circuits, RC4191/2/3, while providing significantly improved efficiency and low voltage operation. Maxim also manufactures the MAX631, MAX632, and MAX633 DC-DC converters which reduce the external component count in fixed output 5V, 12V, and 15V circuits. See Table 2 on the last page of this data sheet for a summary of other Maxim DC-DC converters.

Applications

+5V to +15V DC-DC Converters

High Efficiency Battery Powered DC-DC Converters

+3V to +5V DC-DC Converters

9V Battery Life Extension

Uninterruptible 5V Power Supplies

5mW to 5 Watt Switch-mode Power Supplies

Pin Configuration

Top View

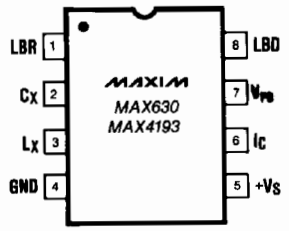

Features

- ♦ High Efficiency—85% Typical
- ♦ 70μA Typical Operating Current
- ♦ 1μA Maximum Quiescent Current
- ♦ 2.0 to 16.5V Operation
- ♦ 525mA (Peak) Onboard Drive Capability
- ♦ ±1.5% Output Voltage Accuracy (MAX630)
- ♦ Low Battery Detector
- ♦ Compact 8 Pin Mini-DIP and SO Packages
- ♦ Pin Compatible With RC4191/2/3

Ordering Information

PART	TEMP. RANGE	8 Lead PACKAGE
MAX630CPA	0°C to +70°C	8 Lead Plastic DIP
MAX630CSA	0°C to +70°C	8 Lead Small Outline
MAX630CJA	0°C to +70°C	8 Lead CERDIP
MAX630EPA	-40°C to +85°C	8 Lead Plastic DIP
MAX630ESA	-40°C to +85°C	8 Lead Small Outline
MAX630EJA	-40°C to +85°C	8 Lead CERDIP
MAX630MJA	-55°C to +125°C	8 Lead CERDIP
MAX4193C/D	0°C to +70°C	Dice
MAX4193CPA	0°C to +70°C	8 Lead Plastic DIP
MAX4193CSA	0°C to +70°C	8 Lead Small Outline
MAX4193CJA	0°C to +70°C	8 Lead CERDIP
MAX4193EPA	-40°C to +85°C	8 Lead Plastic DIP
MAX4193ESA	-40°C to +85°C	8 Lead Small Outline
MAX4193EJA	-40°C to +85°C	8 Lead CERDIP
MAX4193MJA	-55°C to +125°C	8 Lead CERDIP

Typical Operating Circuit

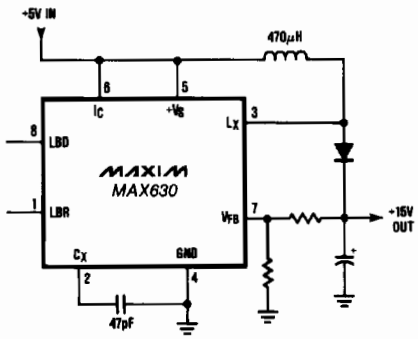

+5V to +15V Converter

MAXIM is a registered trademark of Maxim Integrated Products.

CMOS Micropower Step-Up Switching Regulator

ABSOLUTE MAXIMUM RATINGS

Supply Voltage 18V
Storage Temperature Range ..... -65°C to +160°C
Lead Temperature (Soldering, 10 seconds) ..... +300°C
Operating Temperature Range
MAX630C, MAX4193C ..... 0°C to +70°C
MAX630E, MAX4193E ..... -40°C to +85°C
MAX630M, MAX4193M ..... -55°C to +125°C

Power Dissipation
Plastic DIP (derate 6.25mW/°C above 50°C) 468mW
Small Outline (derate 5.88mW/°C above 50°C) 441mW
CERDIP (derate 8.33mW/°C above 50°C) 833mW
Input Voltage (Pins 1, 2, 6, 7) ..... -0.3V to $+V_S$ +0.3V
Output Voltage, L_X and LBD 18V
L_X Output Current ..... 525mA Peak
LBD Output Current 50mA

Stresses above those listed under "Absolute Maximum Ratings" may cause permanent damage to the device. These are stress ratings only, and functional operation of the device at these or any other conditions above those indicated in the operational sections of the specifications is no implied. Exposure to absolute maximum ratings conditions for extended periods may affect device reliability.

ELECTRICAL CHARACTERISTICS

($+V_S$ = +6.0V, T_A = +25°C, I_C = 5.0µA, unless otherwise noted)

PARAMETER	SYMBOL	CONDITIONS	MAX630 MIN.	MAX630 TYP.	MAX630 MAX.	MAX4193 MIN.	MAX4193 TYP.	MAX4193 MAX.	UNITS
Supply Voltage	$+V_S$	Operating Start-up	2.0 1.8		16.5	2.4		16.5	V
Internal Reference Voltage	V_{REF}		1.29	1.31	1.33	1.24	1.31	1.38	V
Switch Current	I_{SW}	V_3 = 400mV	75	150		75	150		mA
Supply Current (at Pin 5)	I_S	I_3 = 0mA		70	125		90		µA
Efficiency				85			85		%
Line Regulation (Note 1)		$0.5V_0 < V_S < V_0$		0.08	0.2		0.08	0.5	% V_{OUT}
Load Regulation (Note 1)		V_S = +5V, P_{LOAD} = 0 to 150mW		0.2	0.5		0.2	0.5	% V_{OUT}
Operating Frequency Range (Note 2)	F_O		0.1	40	75	0.1	25	75	kHz
Reference Set Internal Pulldown Resistance	R_{IC}	$V_6 = V_S$	0.5	1.5	10	0.5	1.5	10	MΩ
Reference Set Input Voltage Threshold	V_{IC}		0.2	0.8	1.3	0.2	0.8	1.3	V
Switch Current	I_{SW}	V_3 = 1.0V	100			100			mA
Switch Leakage Current	I_{CO}	V_3 = 16.5V		0.01	1.0		0.01	5.0	µA
Supply Current (Shut Down)	I_{SO}	I_C < 0.01µA		0.01	1.0		0.01	5.0	µA
Low Battery Bias Current	I_{LBR}			0.01	10		0.01	10	nA
Capacitor Charging Current	I_{CX}			30			30		µA
C_X + Threshold Voltage				$+V_S$ - 0.1			$+V_S$ - 0.1		V
C_X - Threshold Voltage				0.1			0.1		V
V_{FB} Input Bias Current	I_{FB}			0.01	10		0.01	10	nA
Low Battery Detector Output Current	I_{LBD}	V_8 = 0.4V, V_1 = 1.1V	250	600		250	600		µA
Low Battery Detector Output Leakage	I_{LBDO}	V_8 = 16.5V, V_1 = 1.4V		0.01	5.0		0.01	5.0	µA

Note 1: Guaranteed by correlation with DC pulse measurements.
Note 2: The operating frequency range is guaranteed by design and verified with sample testing.

ELECTRICAL CHARACTERISTICS

($+V_S$ = +6.0V, T_A = Full Operating Temperature Range, I_C = 5.0μA, unless otherwise noted)

PARAMETER	SYMBOL	CONDITIONS	MAX630 MIN.	MAX630 TYP.	MAX630 MAX.	MAX4193 MIN.	MAX4193 TYP.	MAX4193 MAX.	UNITS
Supply Voltage	$+V_S$		2.2		16.5	3.5		16.5	V
Internal Reference Voltage	V_{REF}		1.25	1.31	1.37	1.20	1.31	1.42	V
Supply Current (Pin 5)	I_S	I_3 = 0mA		70	200		90	300	μA
Line Regulation (Note 1)		$0.5V_{OUT} < V_S < V_{OUT}$		0.2	0.5		0.5	1.0	% V_{OUT}
Load Regulation (Note 1)		V_S = +0.5V_0, P_L = 0 to 150mW		0.5	1.0		0.5	1.0	% V_{OUT}
Reference Set Internal Pulldown Resistance	R_{IC}	$V_6 = V_S$ 0°C ≤ T_A ≤ +70°C -40°C ≤ T_A ≤ +85°C -55°C ≤ T_A ≤ +125°C	 0.45 0.4 0.3	 1.5 1.5 1.5	 10 10 10	 0.45 0.4 0.3	 1.5 1.5 1.5	 10 10 10	MΩ
Reference Set Input Voltage Threshold	V_{IC}		0.2	0.8	1.3	0.2	0.8	1.3	V
Switch Leakage Current	I_{C0}	V_3 = 16.5V		0.1	30		0.1	30	μA
Supply Current (Shut Down)	I_{S0}	I_C < 0.01μA		0.01	10		0.01	30	μA
Low Battery Detector Output Current	I_{LBD}	V_8 = 0.4V, V_1 = 1.1V	250	600		250	600		μA

Note 1: Guaranteed by correlation with DC pulse measurements.

Pin Description

PIN	NAME	FUNCTION
1	LBR	Low Battery Detection Comparator input.The LBD output, pin 8, sinks current when ever this pin is below the low battery detector threshold, typically 1.31V.
2	C_X	An external capacitor connected between this terminal and ground sets the oscillator frequency. 47pF = 40KHz.
3	L_X	This pin drives the external inductor. The internal N-channel MOSFET which drives L_X has an output resistance of 4 ohms and a peak current rating of 525mA.
4	GND	Ground.
5	$+V_S$	The positive supply voltage, from 2.0V to 16.5V (MAX630).

PIN	NAME	FUNCTION
6	I_C	The MAX630/MAX4193 shuts down when this pin is left floating or is driven below 0.2V. For normal operation connect I_C directly to $+V_S$ or drive it high with either a CMOS gate or pull-up resistor connected to $+V_S$. The supply current is typically 10nA in the shutdown mode.
7	V_{FB}	The output voltage is set by an external resistive divider connected from the converter output to V_{FB} and Ground. The MAX630/MAX4193 will pulse the L_X output whenever the voltage at this terminal is less than 1.31V.
8	LBD	The Low Battery Detector output is an open drain N-channel MOSFET which sinks up to 600 μA (typ) whenever the LBR input, pin 1, is below 1.31V.

CMOS Micropower Step-Up Switching Regulator

Typical Operating Characteristics

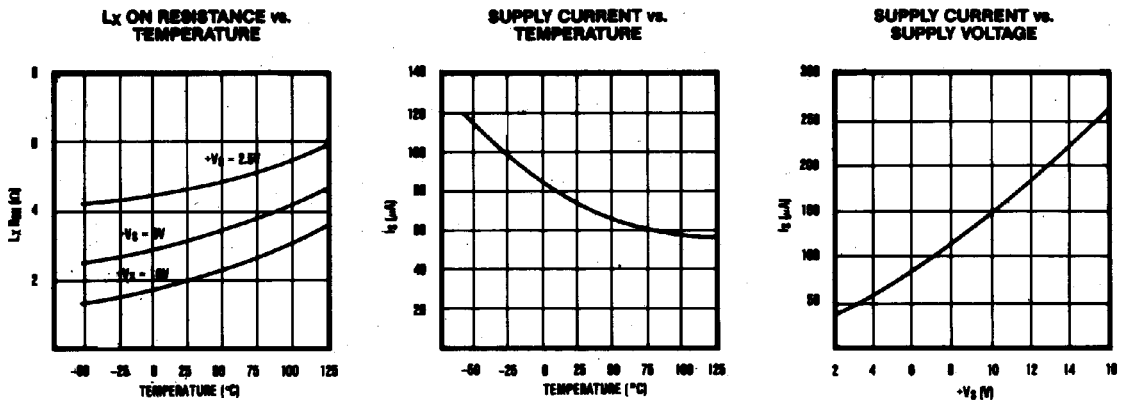

Detailed Description

The operation of the MAX630 can best be understood by examining the voltage regulating loop of Figure 1. R1 and R2 divide the output voltage, which is compared with the 1.3V internal reference by comparator COMP1. When the output voltage is lower than desired, the comparator output goes high and the oscillator output pulses are passed through the NOR gate latch, turning on the output N-channel MOSFET at pin 3, L_X. As long as the output voltage is less than the desired voltage, pin 3 drives the inductor with a series of pulses at the oscillator frequency.

Each time the output N-channel MOSFET is turned on, the current through the external coil, L1, increases, storing energy in the coil. Each time the output turns off, the voltage across the coil reverses sign and the voltage at L_X rises until the catch diode, D1, is forward biased, delivering power to the output.

When the output voltage reaches the desired level, 1.31V x (1 + R1/R2), the comparator output goes low and the inductor is no longer pulsed. Current is then supplied by the filter capacitor, C1, until the output voltage drops below the threshold, and once again L_X is switched on, repeating the cycle. The average duty cycle at L_X is directly proportional to the output current.

Output Driver (L_X Pin)

The MAX630/MAX4193 output device is a large N-channel MOSFET with an ON resistance of 4 ohms and a peak current rating of 525mA. One well known advantage that MOSFETs have over bipolar transistors in switching applications is higher speed, which reduces switching losses and allows the use of smaller, lighter, less costly magnetic components. Also important is that MOSFETs, unlike bipolar transistors, do not require base current which, in low power DC-DC converters, often accounts for a major portion of input power.

The operating current of the MAX630 and MAX4193 increases by approximately 1μA/kHz at maximum power output due to the charging current required by the gate capacitance of the L_X output driver (e.g. 40μA increase at a 40kHz operating frequency). In comparison, equivalent bipolar circuits typically drive their NPN L_X output device with 2mA of base drive, causing the bipolar circuit's operating current to increase by a factor of 10 between no load and full load.

Oscillator

The oscillator frequency is set by a single external, low cost ceramic capacitor connected to pin 2, C_X. 47pF sets the oscillator to 40kHz, a reasonable compromise between lower switching losses at low frequencies and reduced inductor size at higher frequencies.

Low Battery Detector

The low battery detector compares the voltage on LBR with the internal 1.31V reference. The output, LBD, is an open drain N-channel MOSFET. In addition to detecting and warning of a low battery voltage, the comparator can also perform other voltage monitoring operations such as power failure detection.

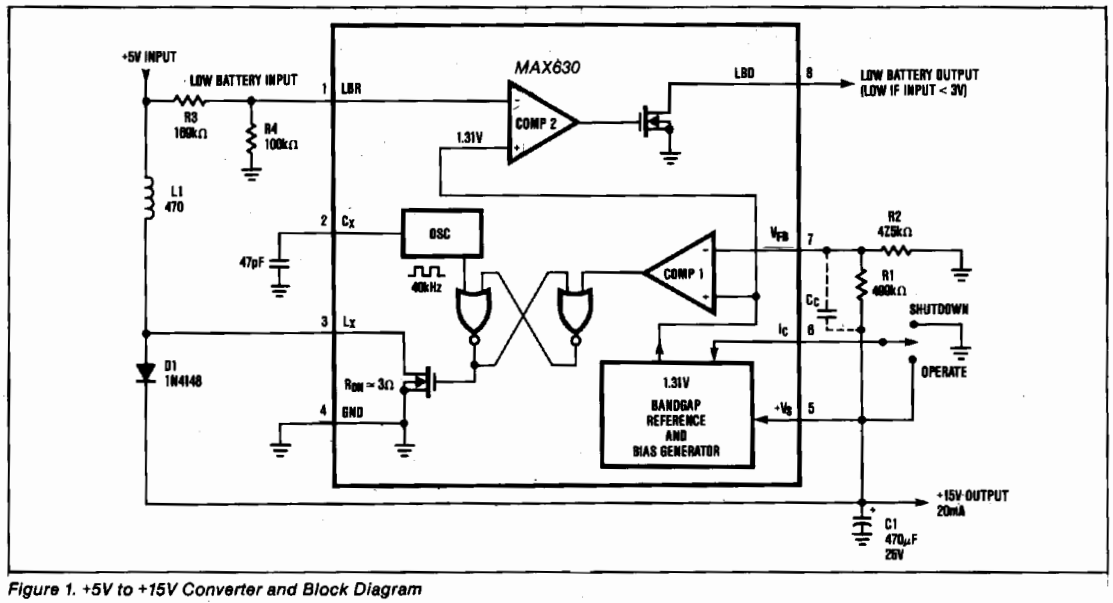

Figure 1. +5V to +15V Converter and Block Diagram

Another use of the low battery detector is to lower the oscillator frequency when the input voltage goes below a specified level. Lowering the oscillator frequency increases the available output power, compensating for the decrease in available power caused by reduced input voltage (See Figure 5).

Logic Level Shutdown Input

The shutdown mode is entered whenever I_C (pin 6) is driven below 0.2V or left floating. When shut down, the MAX630's analog circuitry, oscillator, L_X and LBD outputs are turned off. The device's quiescent current during shutdown is typically 10nA (1µA max).

Bootstrapped Operation

In most circuits, the preferred source of $+V_S$ voltage for the MAX630 and MAX4193 is the boosted output voltage. This is often referred to as a "bootstrapped" operation since the circuit figuratively "lifts" itself up.

The ON resistance of the N-channel L_X output decreases with an increase in $+V_S$, however, the device operating current goes up with $+V_S$ (see typical operating graph, I_S vs. $+V_S$). In circuits with very low output current and input voltages greater than 3V it may be more efficient to connect $+V_S$ directly to the input voltage rather than bootstrap.

External Components

Resistors

Since the LBR and V_{FB} input bias currents are specified as 10nA maximum, the current in the dividers R1/R2 and R3/R4 (figure 1) may be as low as 1µA without significantly affecting accuracy. Normally R2 and R4 are between 10k ohms and 1M ohm, which sets the current in the voltage dividers in the 1.3µA to 130µA range. R1 and R3 can then be calculated as follows:

$$10k\Omega \le R2 \le 1M\Omega \qquad R1 = R2 \times \frac{V_{OUT} - 1.31V}{1.31V}$$

$$10k\Omega \le R4 \le 1M\Omega \qquad R3 = R4 \times \frac{V_{LB} - 1.31V}{1.31V}$$

Where V_{OUT} is the desired output voltage and V_{LB} is the desired low battery warning threshold.

If the I_C (shutdown) input is pulled up through a resistor rather than connected directly to $+V_S$, the current through the pullup resistor should be a minimum of 4µA with I_C at the input-high threshold of 1.3V:

$$R_{IC} \le \frac{+V_S - 1.3V}{4\mu A}$$

CMOS Micropower Step-Up Switching Regulator

Inductor Value

The available output current from a DC-DC voltage boost converter is a function of the input voltage, external inductor value, output voltage and the operating frequency.

The inductor must 1) have the correct inductance, 2) be able to handle the required peak currents, and 3) have acceptable series resistance and core losses. If the inductance is too high, the MAX630 will not be able to deliver the desired output power, even with the L_X output on for every oscillator cycle. The available output power can be increased by either decreasing the inductance or the frequency. Reducing the frequency increases the on-period of the L_X output, thereby increasing the peak inductor current. The available output power is increased since it is proportional to the square of the peak inductor current (I_{pk}).

$$L_{MAX} = \frac{(V_{IN}\,T_{ON})^2\,f}{2\,P_{OUT}}$$

$$\text{since: } P_{OUT} = \frac{L I_{pk}^2\,f}{2}$$

$$\text{and: } I_{pk} = \frac{V_{IN}\,T_{ON}}{L}$$

Where P_{OUT} includes the power dissipated in the catch diode (D1) as well as that in the load. If the inductance is too low, the current at L_X may exceed the maximum rating. The minimum allowed inductor value is expressed by:

$$L_{MIN} = \frac{V_{IN}\,T_{ON}}{I_{MAX}}$$

Where I_{MAX} = 525mA (peak L_X current) and T_{ON} is the on-time of the L_X output.

The most common MAX630 circuit is a boost mode converter (Figure 1). When the N-channel output device is on, the current linearly rises since:

$$\frac{di}{dt} = \frac{V}{L}$$

At the end of the on-time (14μs for 40kHz, 55% duty cycle oscillator) the current is:

$$I_{pk} = \frac{V\,T_{ON}}{L} = \frac{5V \times 14\mu s}{470\mu H} = 150mA.$$

The energy in the coil is:

$$E = \frac{L\,I_{pk}^2}{2} = 5.25\mu J$$

At maximum load this cycle is repeated 40,000 times per second, and the power tranferred through the coil is 40,000x5.25 = 210mW. Since the coil only supplies the voltage above the input voltage, at 15V, the DC-DC converter can supply 210mW/(15V-5V) = 21mA. The coil provides 210mW and the battery directly supplies another 105mW, for a total of 315mW of output power. If the load draws less than 21mA, the MAX630 turns on its output only often enough to keep the output voltage at a constant 15V.

Reducing the inductor value increases the available output current: lower L increases the peak current, thereby increasing the available power. The external inductor required by the MAX630 is readily obtained from a variety of suppliers. (See Table 1). Standard coils are suitable for most applications.

Types of Inductors

Molded Inductors

These are cylindrically wound coils which look similar to 1 watt resistors. They have the advantages of low cost and ease of handling, but have higher resistance, higher losses, and lower power handling capability than other types.

Potted Toroidal Inductors

A typical 1mH, 0.82 ohm potted toroidal inductor (Dale TE-3Q4TA) is 0.685" in diameter by 0.385" high and mounts directly onto a printed circuit board by its leads. Such devices offer high efficiency and mounting ease, but at a somewhat higher cost than molded inductors.

Ferrite Cores (Pot Cores)

Pot cores are very popular as switch-mode inductors since they offer high performance and ease of design. The coils are generally wound on a plastic bobbin, which is then placed between two pot core sections. A simple clip to hold the core sections together completes the inductor. Smaller pot cores mount directly onto printed circuit boards via the bobbin terminals. Cores come in a wide variety of sizes, often with the center posts ground down to provide an air gap. The gap prevents saturation while accurately defining the inductance per turn squared.

Pot cores are suitable for all DC-DC converters, but are usually used in the higher power applications. They are also useful for experimentation since it is easy to wind coils onto the plastic bobbins.

Toroidal Cores

In volume production the toroidal core offers high performance, low size and weight, and low cost. They are, however, slightly more difficult for prototyping, in that manually winding turns onto a toroid is more tedious than on the plastic bobbins used

with pot cores. Toroids are more efficient for a given size since the flux is more evenly distributed than in a pot core, where the effective core area differs between the post, side, top and bottom.

Since it is difficult to gap a toroid, manufacturers produce toroids using a mixture of ferromagnetic powder (typically iron or Mo-Permalloy powder) and a binder. The permeability is controlled by varying the amount of binder, which changes the effective gap between the ferromagnetic particles. Mo-Permalloy powder (MPP) cores have lower losses and are recommended for the highest efficiency, while iron powder cores are lower cost.

Table 1. Coil and Core Manufacturers

MANUFACTURER	TYPICAL PART #	DESCRIPTION
MOLDED INDUCTORS		
Dale	IHA-104	500μH, 0.5 ohms
Nytronics	WEE-470	470μH, 10 ohms
TRW	LL-500	500μH, 0.75 ohms
POTTED TOROIDAL INDUCTORS		
Dale	TE-3Q4TA	1mH, 0.82 ohms
TRW	MH-1	600μH, 1.9 ohms
Torotel Prod.	PT 53-18	500μH, 5 ohms,
FERRITE CORES AND TOROIDS		
Allen Bradley	T0451S100A	Tor. Core, 500nH/T²
Siemens	B64290-K38-X38	Tor. Core, 4μH/T²
Magnetics	555130	Tor. Core, 53nH/T²
Stackpole	57-3215	Pot Core, 14mm x 8mm
Magnetics	G-41408-25	Pot Core, 14 x 8, 250nH/T²

Note: This list does not constitute an endorsement by Maxim Integrated Products and is not intended to be a comprehensive list of all manufacturers of these components.

Diodes

In most MAX630 circuits, the inductor current returns to zero before L_X turns on for the next output pulse. This allows the use of slow turn-off diodes. On the other hand, the diode current abrubtly goes from zero to full peak current each time L_X switches off (figure 1, D1). To avoid excessive losses, the diode must therefore have a fast turn-on time.

For low power circuits with peak currents less than 100mA, signal diodes such as 1N4148s perform well. For higher current circuits, or for maximum efficiency at low power, the 1N5817 series of Schottky diodes are recommended. Although 1N4001s and other general purpose rectifiers are rated for high currents, they are unacceptable because their slow turn-on time results in excessive losses.

Filter Capacitor

The output voltage ripple has two components, with approximately 90° phase difference between them. One component is created by the change in the capacitor's stored charge with each output pulse. The other ripple component is the product of the capacitor's charge/discharge current and its ESR (effective series resistance). With low cost aluminum electrolytic capacitors, the ESR produced ripple is generally larger than that caused by the change in charge.

$$V_{ESR} = I_{pk} \times ESR = \left(\frac{V_{IN}}{2Lf}\right) \times ESR \text{ (Volts p-p)}$$

Where V_{IN} is the coil input voltage, L is its inductance, f is the oscillator frequency, and ESR is the equivalent series resistance of the filter capacitor.

The output ripple resulting from the change in charge on the filter capacitor is:

$$V_{dQ} = \frac{Q}{C} \text{ where, } Q = t_{DIS} \times \frac{I_{peak}}{2}$$

$$\text{and, } I_{peak} = t_{CHG} \times \frac{V_{IN}}{L}$$

$$V_{dQ} = \frac{V_{IN}(t_{CHG})(t_{DIS})}{2LC}$$

Where t_{CHG} and t_{DIS} are the charge and discharge times for the inductor (1/2f can be used for nominal calculations).

Oscillator Capacitor, C_X

The oscillator capacitor, C_X, is a non-critical ceramic or silver mica capacitor. C_X can also be calculated by:

$$C_X = \frac{2.14 \times 10^{-6}}{f} - C_{INT} \; (C_{INT} \simeq 5\text{pF, see text})$$

Where f is the desired operating frequency in Hertz, and C_{INT} is the sum of the stray capacitance on the C_X pin and the internal capacitance of the package. The internal capacitance is typicaly 1pF for the plastic package and 3pF for the CERDIP package. Typical stray capacitances are about 3pF for normal printed circuit board layouts, but will be significantly higher if a socket is used.

CMOS Micropower Step-Up Switching Regulator

Bypassing and Compensation

Since the inductor charging current can be relatively large, high currents can flow through the ground connection of the MAX630/4193. To prevent unwanted feedback, the impedance of the ground path must be as low as possible, and supply bypassing should be used for the device.

When large values (>50kΩ) are used for the voltage setting resistors, R1 and R2 of Figure 1, stray capacitance at the V_{FB} input can add a lag to the feedback response, destabilizing the regulator, increasing low frequency ripple, and lowering efficiency. This can often be avoided by minimizing the stray capacitance at the V_{FB} node. It can also be remedied by adding a lead compensation capacitor of 100pF to 10nF in parallel with R1 in Figure 1.

DC-DC Converter Configurations

DC-DC converters come in three basic topologies: buck, boost, and buck-boost (figure 2). The MAX630 is usually operated in the positive voltage boost circuit, where the output voltage is greater than the input.

The boost circuit is used where the input voltage is always less than the desired output and the buck circuit is used where the input is greater than the output. The buck-boost circuit inverts, and can be used with input voltages which are either greater or less than the output.

DC-DC converters can also be classified by the control method. The two most common are pulse width modulation (PWM) and pulse frequency modulation (PFM). PWM switch-mode power supply ICs (of which current mode control is one variant) are well established in high power off-line switchers. Both PWM and PFM circuits control the output voltage by varying duty cycle. In the PWM circuit the frequency is held constant and the width of each pulse is varied. In the PFM circuit, the pulse width is held constant and duty cycle is controlled by changing the pulse repetition rate.

The MAX630 refines the basic PFM by employing a constant frequency oscillator. Its output MOSFET is switched on when the oscillator is high and the output voltage is lower than desired. If the output voltage is higher than desired, the MOSFET output is disabled for that oscillator cycle. This "pulse skipping" varies the average duty cycle, and thereby controls the output voltage.

Note that, unlike the PWM ICs which use an op-amp as the control element, the MAX630 uses a comparator to compare the output voltage to an onboard reference. This reduces the number of external components, and operating current.

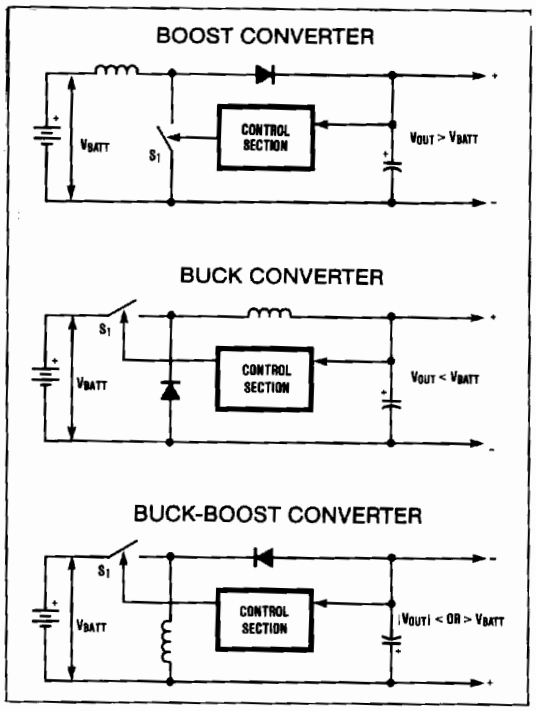

Figure 2. DC-DC Converter Configurations

Typical Applications

+5V to +15V DC-DC Converter

Figure 1 shows a simple circuit which generates +15V at approximately 20mA from a +5V input. The MAX630 has a ±1.5% reference accuracy, so the output voltage has an untrimmed accuracy of ±3.5% if R1 and R2 are 1% resistors. Other output voltages can also be selected by changing the feedback resistors. Capacitor C_X sets the oscillator frequency (47pF=40kHz), while C1 limits output ripple to about 50mV.

With a low cost molded inductor, the circuit's efficiency is about 75%, but an inductor with lower series resistance such as the Dale TE3Q4TA increases efficiency to around 85%. A key to high efficiency is that the MAX630 itself is powered from the +15V output. This provides the onboard N-channel output device with 15V gate drive, lowering its ON resistance to about 4 ohms. When +5V power is first applied, current flows through L1 and D1, supplying the MAX630 with 4.4V for startup.

+5V to ±15V DC-DC Converter

The circuit in Figure 3 is similar to that of Figure 1 except that two more windings are added to the inductor. The 1408 (14mm x 8mm) pot core specified is an IEC standard size available from many manufacturers (see Table 1). The -15V output is semi-regulated, typically varying from -13.6V to -14.4V as the +15V load current changes from no load to 20mA.

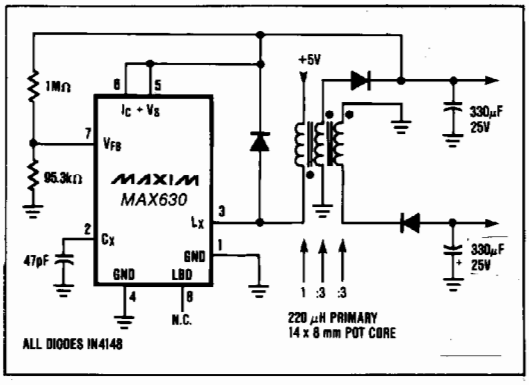

Figure 3. +5V to ±15V Converter

2½ Watt 3V to 5V DC-DC Converter

Some systems, although battery powered, need high currents for short periods, and then shutdown to a low power state. The extra circuitry of Figure 4 is designed to meet these high current needs. Operating in the buck-boost or flyback mode, the circuit converts -3V to +5V. The left side of the figure is similar to Figure 1, and supplies 15V for the gate drive of the external power MOSFET. This 15V gate drive ensures that the external device is completely turned on and has low ON resistance.

The right side of Figure 4 is a -3V to +5V buck-boost converter. This circuit has the advantage that when the MAX630 is turned off the output voltage falls to 0V, unlike the standard boost circuit where the output voltage is V_{BATT}-0.6V when the converter is shutdown. When shutdown, this circuit uses less than 10uA, with most of the current being the leakage current of the power MOSFET.

The inductor and output filter capacitor values have been selected to accomodate the increased power levels. With the values indicated, this circuit can supply up to 500mA at 5V, with an efficiency of 85%. Since the left side of the circuit powers only the right hand MAX630, the circuit will start up with battery voltages as low as 1.5V, independent of the loading on the +5V output.

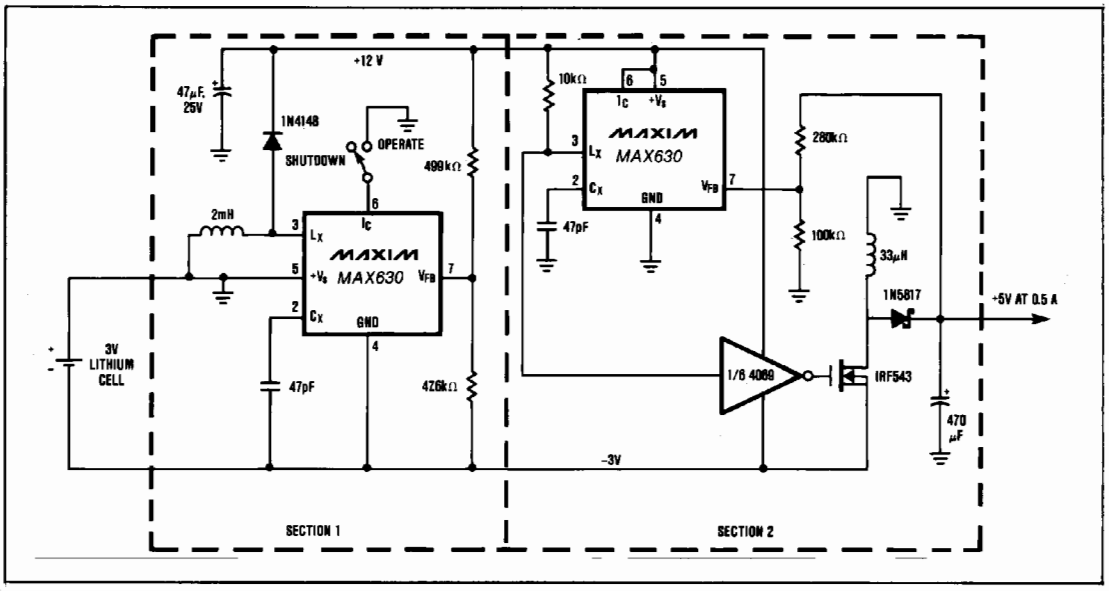

Figure 4. High Power 3V to 5V Converter with Shutdown

CMOS Micropower Step-Up Switching Regulator

+3V Battery to +5V DC-DC Converter

A common power supply requirement involves conversion of a 2.4 or 3V battery voltage to a 5V logic supply. The circuit in figure 5 converts 3V to 5V at 40mA with 85% efficiency. When I_C (pin 6) is driven low, the output voltage will be the battery voltage minus the drop across diode D1.

The optional circuitry using C1, R3, and R4 lowers the oscillator frequency when the battery voltage falls to 2.0V. This lower frequency maintains the output power capability of the circuit by increasing the peak inductor current, compensating for the reduced battery voltage.

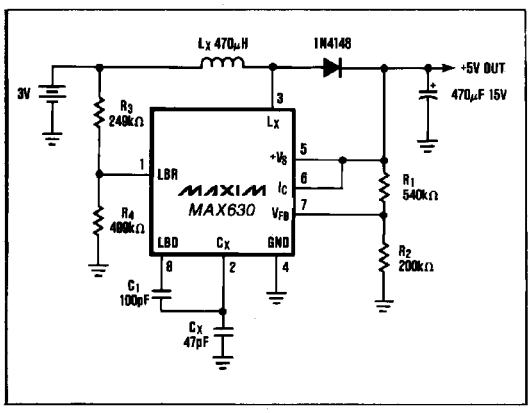

Figure 5. 3V to 5V Converter with Low-Battery Frequency Shift

Uninterruptable +5V Supply

In Figure 6 the MAX630 provides a continuous supply of regulated +5V, with automatic switch-over between line power and battery backup. When the line powered input voltage is at +5V, it provides 4.4V to the MAX630 and trickle charges the battery. If the line powered input falls below the battery voltage, the 3.6V battery supplies power to the MAX630, which boosts the battery voltage up to +5V, thus maintaining a continuous supply to the uninterruptable +5V bus. Since the +5V output is always supplied through the MAX630, there are no power spikes or glitches during power transfer.

The MAX630's low battery detector monitors the line powered +5V, and the LBD output can be used to shut down unnecessary sections of the system during power failures. Alternatively, the low battery detector could monitor the Nicad battery voltage and provide warning of power loss when the battery is nearly discharged.

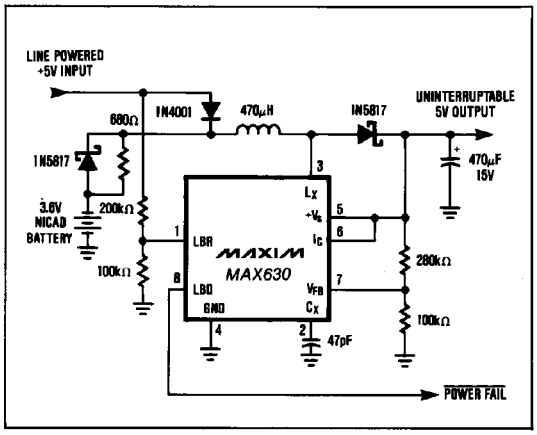

Figure 6. Uninterruptable +5V Supply

Unlike battery backup systems that use 9V batteries, this circuit does not need +12 or +15V to recharge the battery. Consequently, it can be used to provide +5V backup on modules or circuit cards which only have 5V available.

9V Battery Life Extender

Figure 7's circuit provides a minimum of 7V until the 9V battery voltage falls to less than 2V. When the battery voltage is above 7V the MAX630's I_C pin is low, putting it into the shutdown mode which draws only 10nA. When the battery voltage falls to 7V, the MAX8212 Voltage Detector's output goes high, enabling the MAX630. The MAX630 then maintains the output voltage at 7V even as the battery voltage falls below 7V. The low battery detector (LBD) is used to decrease the oscillator frequency when the battery voltage falls to 3V, thereby increasing the output current capability of the circuit.

Note that this circuit (with or without the MAX8212) can be used to provide 5V from 4 alkaline cells. The initial voltage is approximately 6V, and the output is maintained at 5V even when the battery voltage falls to less than 2V.

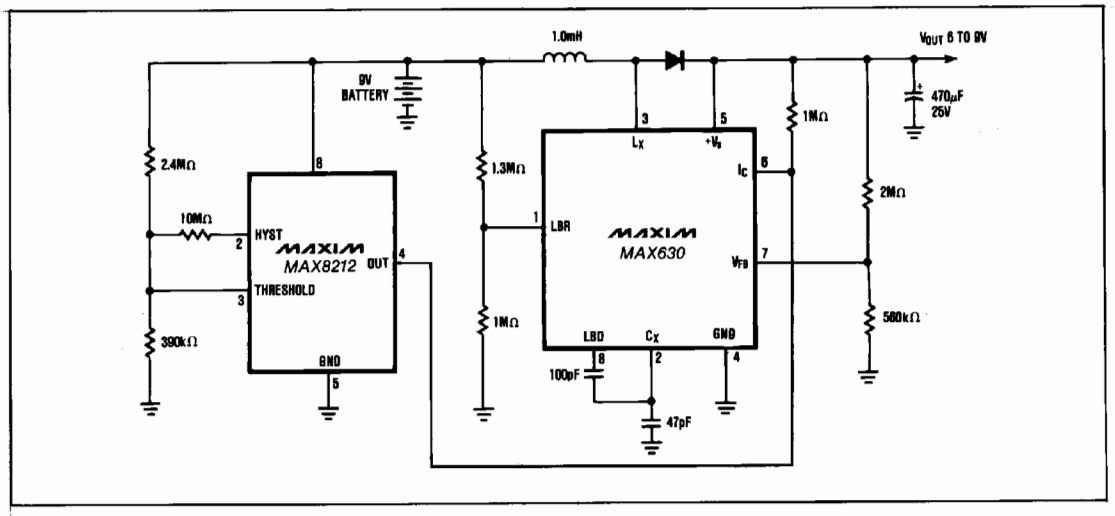

Figure 7. Battery Life Extension Down To 3V In

Dual Tracking Regulator

A MAX634 Inverting Regulator is combined with a MAX630 in Figure 8 to provide a dual tracking ±15V output from a 9V battery. The reference for the -15V output is derived from the positive output via R3 and R4. Both regulators are set to maximize output power at low battery voltage by reducing the oscillator frequency, via LBR, when V_{BATT} falls to 7.2V.

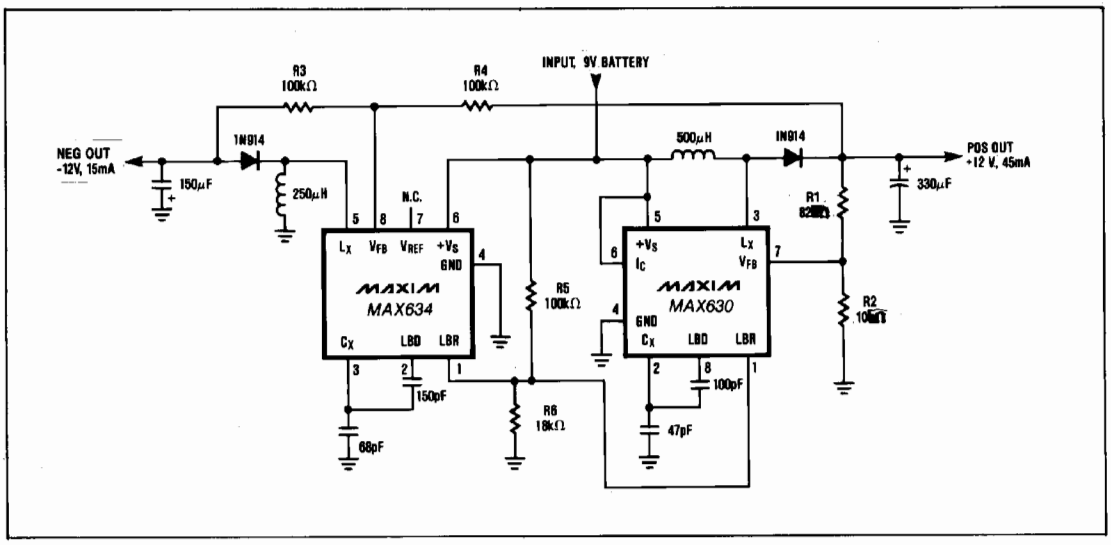

Figure 8. ±12V Dual Tracking Regulator

CMOS Micropower Step-Up Switching Regulator

Table 2. Maxim DC-DC Converters

DEVICE	DESCRIPTION	INPUT VOLTAGE	OUTPUT VOLTAGE	COMMENTS
ICL7660	Charge Pump Voltage Inverter	1.5V to 10V	$-V_{IN}$	Not regulated
MAX4193	DC-DC Boost Converter	2.4V to 16.5V	$V_{OUT} > V_{IN}$	RC4193 2nd source
MAX630	DC-DC Boost Converter	2.0V to 16.5V	$V_{OUT} > V_{IN}$	Improved RC4191 2nd source
MAX631	DC-DC Boost Converter	1.5V to 5.6V	+5V	Only 2 external components
MAX632	DC-DC Boost Converter	1.5V to 12.6V	+12V	Only 2 external components
MAX633	DC-DC Boost Converter	1.5V to 15.6V	+15V	Only 2 external components
MAX4391	DC-DC Voltage Inverter	4V to 16.5V	up to -20V	RC4391 2nd source
MAX634	DC-DC Voltage Inverter	2.3V to 16.5V	up to -20V	Improved RC4391 2nd source
MAX635	DC-DC Voltage Inverter	2.3V to 16.5V	-5V	Only 3 external components
MAX636	DC-DC Voltage Inverter	2.3V to 16.5V	-12V	Only 3 external components
MAX637	DC-DC Voltage Inverter	2.3V to 16.5V	-15V	Only 3 external components
MAX638	DC-DC Voltage Stepdown	3V to 16.5V	$V_{OUT} < V_{IN}$	Only 3 external components
MAX641	High Power Boost Converter	1.5V to 5.6V	+5V	Drives external MOSFET
MAX642	High Power Boost Converter	1.5V to 12.6V	+12V	Drives external MOSFET
MAX643	High Power Boost Converter	1.5V to 15.6V	+15V	Drives external MOSFET

Chip Topography

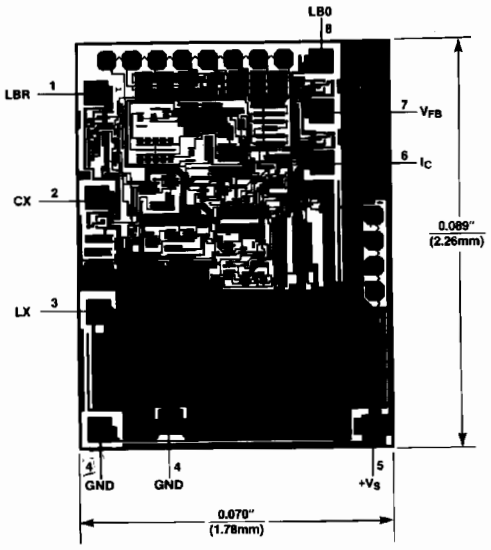

Packaging Information

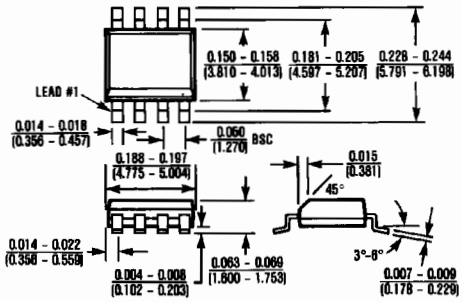

8 Lead Small Outline (SA)
θ_{JA} = 170°C/W
θ_{JC} = 80°C/W

See MAXIM Databook for additional package information.

Maxim cannot assume responsibility for use of any circuitry other than circuitry entirely embodied in a Maxim product. No circuit patent licenses are implied. Maxim reserves the right to change the circuitry and specifications without notice at any time.

© 1994 Maxim Integrated Products Printed USA MAXIM is a registered trademark of Maxim Integrated Products.