①PHYSICAL DIMENSION

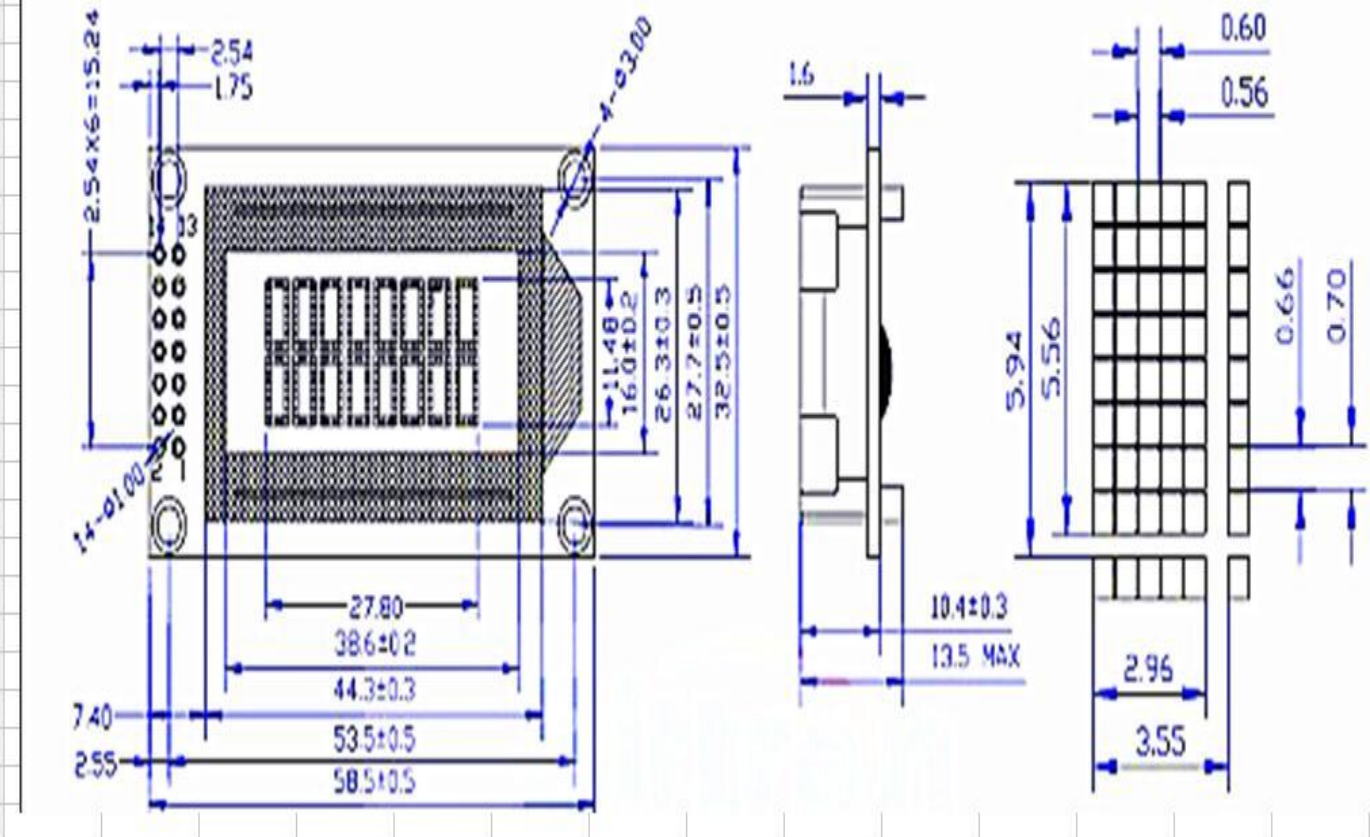

接口定义

②MECHANICAL SPECIFICATIONS

Item	Nominal Dimensions(mm)
Module Size(W×H×T)	58.5×32.5×13.5
Viewing Area(W×H)	38.6×16.4
Character Size(W×H)	2.96×5.56
Dot Size(W×H)	0.56×0.66

④FEATURE

LCD Type & Colour	STN:Yellow-Green,Blue,FSTN
View Angle	6 O'clock
Display Type	Positive Type,Negative Type
Control IC & Package	KS0066 or EQV,COB
Operating Temperature	-20℃~70℃
Storage Temperature	-30℃~80℃

③PIN CONNECTIONS

Pin	Symbol	Function
1	VSS	Ground for Logic(0V)
2	VDD	Power supply for Logic(+5V)
3	V0	Power supply for LCD Driver
4	RS	H: Data; L: Instruction Code
5	R/W	H: Read; L: Write
6	E	Enable signal
7-14	DB0-DB7	Data Bus Line