ESS Technology, Inc.

ES1868
*Audio*Drive® Solution
Product Brief

DESCRIPTION

The ES1868 *Audio*Drive® solution is a mixed-signal single-chip solution that adds 16-bit stereo sound and FM music synthesis to personal computers. It includes an embedded microprocessor, an OPL3™ superset **ESFM**™ music synthesizer, 16-bit stereo wave CODEC, 16-bit stereo music DAC, hardware master volume control, MPU-401 UART mode serial port, dual game port, full Plug and Play support, CD-ROM IDE interface, two serial port interfaces to external DSP and external ES689/ES69x wavetable music synthesizer, DMA control logic with FIFO, and ISA bus interface logic. There are three stereo inputs (typically line-in, CD audio, and auxiliary line-in) and a mono microphone input to an internal preamp. All of this is embodied in a single chip that can be designed into a motherboard, add-on card, or integrated into other peripheral cards such as voice/fax/modem, VGA, LAN, I/O, etc.

The ES1868 *Audio*Drive® can record, compress, and play back voice, sound, and music with built-in mixer controls. Using two high-performance DMA channels, the ES1868 supports full-duplex analog operation for simultaneous record and playback. The **ESFM**™ synthesizer has extended capabilities within native mode operation providing superior sound and power down capabilities. It is register compatible to OPL3.

The ES1868 *Audio*Drive® supports the full ISA Plug and Play standard. It provides Plug and Play configuration for logical devices: audio, **ESFM**™ synthesizer, game port, MPU-401, CD-ROM IDE, modem, and an additional user defined device.

The MPU-401 hardware is for interfacing to an external MIDI serial port. The ES1868 music DAC allows the use of an external ES689/ES69x wavetable sythesizer through the ES1868's third serial port. The dual game port supports two joysticks both having X, Y resistor value settings and two pushbutton switches.

A DSP serial interface allows an external DSP to take over ADC or DAC resources. I/O address, DMA, and interrupt selection can be controlled by system software.

Advanced power management features include suspend/resume from disk or host-independent self-timed power-down and automatic wake-up.

The ES1868 *Audio*Drive® solution is available in an industry-standard 100-pin Plastic Quad Flat Pack (PQFP) package.

APPLICATIONS

- Business Audio
- Multimedia PCs
- PC Games
- Music Synthesis

FEATURES

- Single, high-performance, mixed-signal, 16-bit stereo VLSI chip
- High-quality, OPL3 superset **ESFM**™ music synthesizer
- Patented **ESPCM**® compression
- CD-ROM IDE interface
- New configurable DMA supports demand transfer and F-type

Plug and Play Features

- On-chip Plug and Play support for audio, joystick port, FM, modem, MPU-401, CD-ROM, and an additional user-defined I/O device
- Software address mapping, and 4 DMA and 6 IRQ selections for motherboard implementation
- Internal configuration data for audio Plug and Play support
- Read/Write serial interface for Plug and Play resource EEPROM

Record and Playback Features

- Record, compress, and play back voice, sound, and music
- 16-bit stereo ADC and DAC
- Programmable sample rates from 4 kHz to 44.1 kHz for record and playback
- Full-duplex operation for simultaneous record and playback
- 3-button hardware volume control for up, down, and mute

Inputs and Outputs

- 3 stereo inputs for line-in, CD audio, and auxiliary line-in, and a mono input for microphone
- MPU-401 (UART mode) interface for wavetable synthesizers and MIDI devices
- Integrated dual game port
- Serial port interface to external DSP optionally controls full-duplex operation

Mixer Features

- 6-channel mixer with stereo for line, CD audio, auxiliary line, music synthesizer, digital audio (wave files), and mono input for microphone
- Programmable 6-bit (64 step) logarithmic master volume control

Power

- Advanced power management with self-timed power-down, automatic wake-up, and suspend/resume to and from disk
- Supports 3.3 V or 5.0 V operation

Compatibility

- Supports PC games and applications for Sound Blaster™ and Sound Blaster™ Pro
- Supports Microsoft® Windows™ Sound System®

BLOCK DIAGRAM

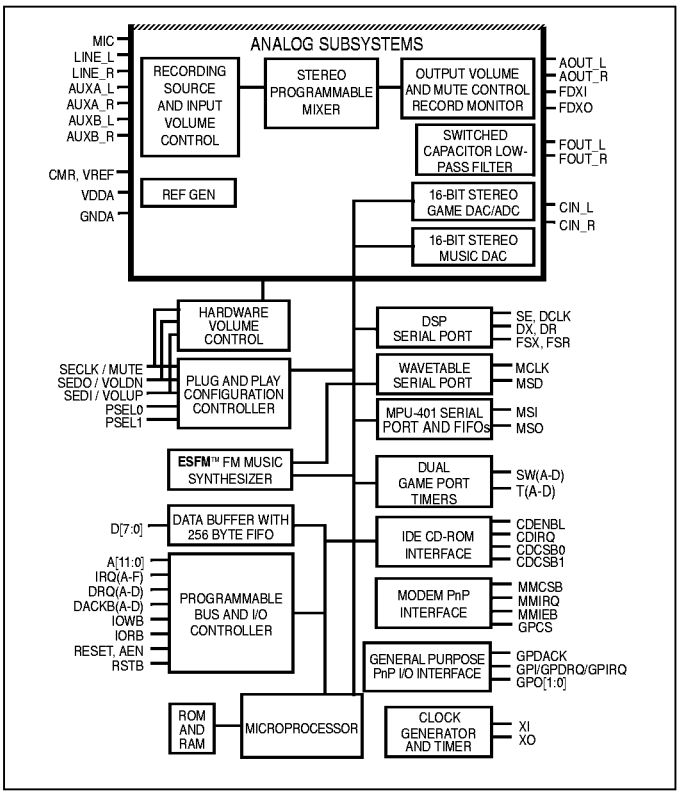

PINOUT

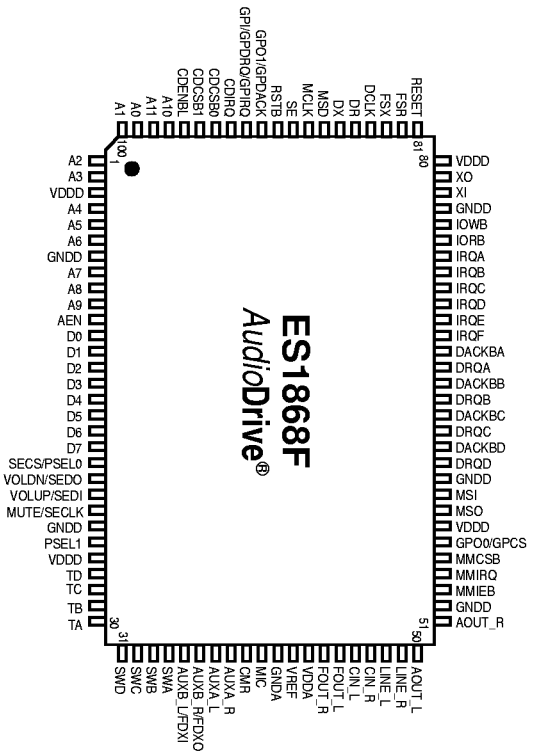

PIN DESCRIPTION

Name	Number	I/O	Description
A[9:0]	10:8, 6:4, 2:1, 100:99	I	Address inputs from ISA bus.
VDDD	3, 26, 57, 80	I	Digital supply voltage.
GNDD	7, 24, 52, 60, 77	I	Digital ground.
AEN	11	I	Active-low, address enable from ISA bus.
D[7:0]	19:12	I/O	Bidirectional data bus. These pins have weak pull-up devices to prevent these inputs from floating when not driven.
SECS	20	I/O	Serial EEPROM CS. This is an input pin during RESET.
PSEL0		I	In conjunction with PSEL1, this pin selects the PnP ROM device used. See PSEL1 pin description.
VOLDN	21	I	Active-low, volume decrease button input (shared with the SEDO pin).
SEDO		I	Data output pin of external PnP serial EEPROM.
VOLUP	22	I	Active-low, volume increase button input (shared with the SEDI pin).
SEDI		I	Data input pin to external PnP serial EEPROM.
MUTE	23	I	Active-low, mute toggle button input (shared with the SECLK pin).
SECLK		O	External serial EEPROM clock pin for PnP.
PSEL1	25	I	In conjunction with PSEL0, this pin selects the PnP ROM device used: PSEL1 SECS/PSEL0 0 0 Internal ROM 1 1 93LC66 – 512 x 8, 9 address bits
T(A-D)	27:30	I/O	Joystick timer pins. These pins connects to the X-Y positioning variable resistors for the two joysticks.
SW(A-D)	31:34	I	Active-low, joystick switch setting inputs. These SW pins have an internal 2K pull-up resistor. The joystick port is typically at address 201.
FDXI	35	I	Input with internal pull-up to CMR. Alternate input to left channel filter stage in DSP serial mode. This function is shared with the AUXB_L input.
AUXB_L		I	Auxiliary input left. AUXB_L has an internal pull-up resistor to CMR. Normally intended for connection to an external wavetable music synthesizer or other line level source. This pin is optioned with the FDXI function.
FDXO	36	O	Normally connected to CMR via an internal resistor. Can be programmed to connect internal to FOUT_R pin during DSP serial mode. This function is shared with the AUXB_R input.
AUXB_R		I	Auxiliary input right. AUXB_R has an internal pull-up resistor to CMR. Normally intended for connection to an external wavetable music synthesizer or other line level source. This pin is optioned with the FDXO function.
AUXA_L, AUXA_R	37, 38	I	Auxiliary inputs left and right. AUXA_L and AUXA_R have internal pull-up resistors to CMR. Normally intended for connection to an internal or external CD-ROM analog output.
CMR	39	O	Buffered reference output. Should be bypassed to analog ground with a 47 µF electrolytic capacitor with a .1 µF capacitor in parallel.

Name	Number	I/O	Description
MIC	40	I	Microphone input. MIC has an internal pull-up resistor to CMR.
GNDA	41	I	Analog ground.
VREF	42	O	Reference generator resistor divider output. Should be bypassed to analog ground with 0.1 µF capacitor.
VDDA	43	I	Analog supply voltage (4.5 to 5.5 V). Should be greater than or equal to VDDD -0.3 V.
FOUT_L, FOUT_R	45:44	O	Filter outputs left and right. AC coupled externally to CIN_L and CIN_R to remove DC offsets. These outputs have internal series resistors of about 5K Ω. Capacitors to analog ground on these pins can be used to create a low-pass filter pole that removes switching noise introduced by the switched-capacitor filters.
CIN_L, CIN_R	46, 47	I	Capacitive coupled inputs left and right. These inputs have internal pull-up resistors to CMR of approximately 50K Ω.
LINE_L, LINE_R	48, 49	I	Line input left and right. LINE_L and LINE_R have internal pull-up resistors to CMR.
AOUT _L, AOUT_R	50, 51	O	Line level stereo outputs, left and right.
MMIEB	53	I	Modem interrupt enable input. Generated from the modem UART.
MMIRQ	54	I	IRQ input from the modem device that gets mapped to an IRQ output on the ES1868 based on the PnP configuration.
MMCSB	55	O	Output from ES1868 for the modem CSB. The address space is determined by the PnP configuration.
GPO0	56	O	The GPO0 output that is set low by external reset and thereafter controlled by bit 0 of port 2x7h. Available to system software for power management or other applications
GPCS	56	O	If selected by the PnP logic, pin 56 becomes a user defined general purpose CS, based on the PnP configuration.
MSI	59	I	MIDI serial input. Schmitt trigger input with internal pull-up resistor. Either MPU-401 or Sound Blaster formats.
MSO	58	O	MIDI serial data output.
DRQ(A-D)	67, 65, 63, 61	O	Four (A,B,C,D) active-high, DMA requests to the ISA bus. Unselected DRQ outputs are high impedance. When DMA is not active, the selected DRQ output has a pull-down device that holds the DRQ line inactive unless another device that shares the same DRQ line can source enough current to make the DRQ line active. DRQs are software configurable.
DACKB(A-D)	68, 66, 64, 62	I	Four (A,B,C,D) active-low, DMA acknowledge inputs.
IRQ(A-F)	74:69	O	Six (A,B,C,D,E,F) active-high interrupt requests to the ISA bus. Unselected IRQ outputs are high impedance. IRQs are software configurable.
IORB	75	I	Active-low, read strobe from ISA bus.
IOWB	76	I	Active-low, write strobe from ISA bus.
XO	79	O	Crystal oscillator output.
XI	78	I	Crystal oscillator input.
RESET	81	I	Active-high, reset from ISA bus.
FSR	82	I	Input with internal pull-down. Frame sync for receive data from external DSP. Programmable for active-high or active-low.
FSX	83	I	Input with internal pull-down. Frame sync for transmit request from external DSP. Programmable for active-high or active- low.
DCLK	84	I	Input with internal pull-down. Serial data clock from external DSP. Typically 2.048 MHz.
DR	85	I	Input with internal pull-down. Data receive pin from external DSP.
DX	86	O	Tri-state output. Data transmit to external DSP. High impedance when not transmitting.
MSD	87	I	Input with internal pull-down. Music serial data from external ES689/ES690 wavetable music synthesizer.
MCLK	88	I	Input with internal pull-down. Music serial clock from external ES689/ES690 wavetable music synthesizer.
SE	89	I	Input with internal pull-down. Active-high to enable serial mode, i.e., enables an external DSP to control analog resources of the ES1868 through the DSP serial interface.
RSTB	90	O	Inverted RESET output.
GPO1	91	O	Output that is set high by external reset and thereafter controlled by bit 1 of port Audio_Base + 7h. Available to system software for power management or other applications.
GPDACK		O	Shared with GPO1 pin. This can be used as a DMA channel DACK for a modem, CD-ROM, or a user defined general purpose device.
GPI	92	I	General purpose input option.
GPDRQ		O	This pin can be used as a DMA request output for the modem, CD-ROM, or the user defined general purpose device based on the PnP configuration.
GPIRQ		O	This pin can be used as an interrupt request output for the CD-ROM, or the user defined general purpose device based on the PnP configuration.
CDIRQ	93	I	The interrupt request input from the CD-ROM.
CDCSB0	94	O	CD-ROM CS 0 pin.
CDCSB1	95	O	CD-ROM CS 1 pin.
CDENBL	96	O	CD-ROM enable pin.
A[11:10]	98:97	I	Address inputs from ISA bus. The ES1868 requires these pins to be low for all address decodes.

MAXIMUM RATINGS

Rating	Symbol	Value
Analog supply voltage	VDDA	-0.3 to 7.0 V
Digital supply voltage	VDDD	-0.3 to 7.0 V
Input voltage	VIN	-0.3 to 7.0 V
Operating temperature range	TA	0 to 70 °C
Storage temperature range	TSTG	-50 to 125 °C

ANALOG CHARACTERISTICS

Parameter	Pins	Min	Typ	Max	Unit
Reference voltage	CMR, VREF (VDDA = 5.0 V)		2.25		V
Input impedance	LINE_L, LINE_R, AUXA_ L, AUXA_R, AUXB_L, AUXB_R, MIC	30K		100K	Ω
	CIN_L, CIN_R	35K	50K	65K	Ω
Output impedance	FOUT_L, FOUT_R	3.5K	5K	6.5K	Ω
	AOUT_L, AOUT_R max load for full-scale output range		5K		Ω
Input voltage range	MIC	10		125	mVp-p
	LINE_L, LINE_R, AUXA_L, AUXA_R, AUXB_L, AUXB_R	0.5		VDDA -1.0	V
Output voltage range	AOUT_L, AOUT_R full-scale output range	0.5		VDDA -1.0	V
Gain	Mic preamp		26		dB

DIGITAL CHARACTERISTICS

Symbol	Parameters	Min	Max	Unit	Conditions
VIH1	Input high voltage: All except XI	2.0		V	VDDD = min
VIH2	Input high voltage: XI	3.0		V	VDDD = min
VIL	Input low voltage		0.8	V	VDDD = max
VOL1	Output low voltage, all except D[7:0], DRQx, IRQx		0.4	V	IOL = 4 mA, VDDD = min
VOH1	Output high voltage, all except D[7:0], DRQx, IRQx	2.4		V	IOH = -3 mA, VDDD = max
VOL2	Output low voltage, D[7:0], DRQx, IRQx		0.4	V	IOL = 16mA, VDDD = min
VOH2	Output high voltage, D[7:0], DRQx, IRQx	2.4		V	IOH = -12 mA, VDDD = max

IMPLEMENTATION PLATFORMS

- Desktop PCs
- Motherboards
- Multifunction Cards
- Sound Cards
- Voice/Fax/Modem Cards

TYPICAL APPLICATION

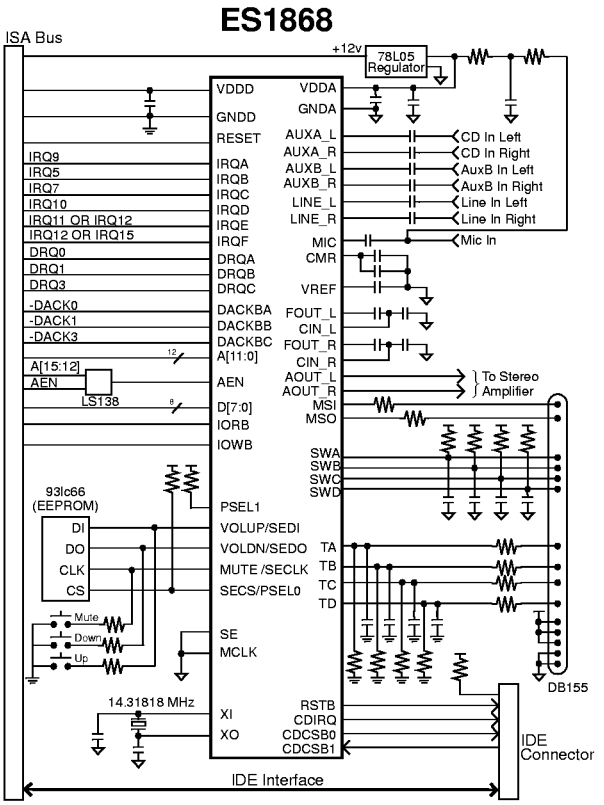

BUNDLED SOFTWARE AND DRIVERS

- *Audio***Rack**™
- Device Drivers for:
  - Microsoft Windows®95
  - Microsoft Windows 3.1
  - Microsoft Windows for Workgroups™
  - Microsoft Windows NT®
  - IBM® OS/2® Warp™

SERVICE AND SUPPORT

- Evaluation Kit
- Manufacturing Kit
- Reference Design

ESS Technology, Inc.
48401 Fremont Blvd.
Fremont, CA 94538
Tel: 510-492-1088
Fax: 510-492-1098

AudioDrive®

(P) U.S. Patent 4,214,125 and others, other patents pending.
All specifications are subject to change without prior notice.
ESPCM® and *Audio***Drive**® are registered trademarks of ESS Technology, Inc.
ESFM™ and *Audio***Rack**™ are trademarks of ESS Technology, Inc.
All other trademarks are owned by their respective holders.

Document Number: SAM0009C May 1997