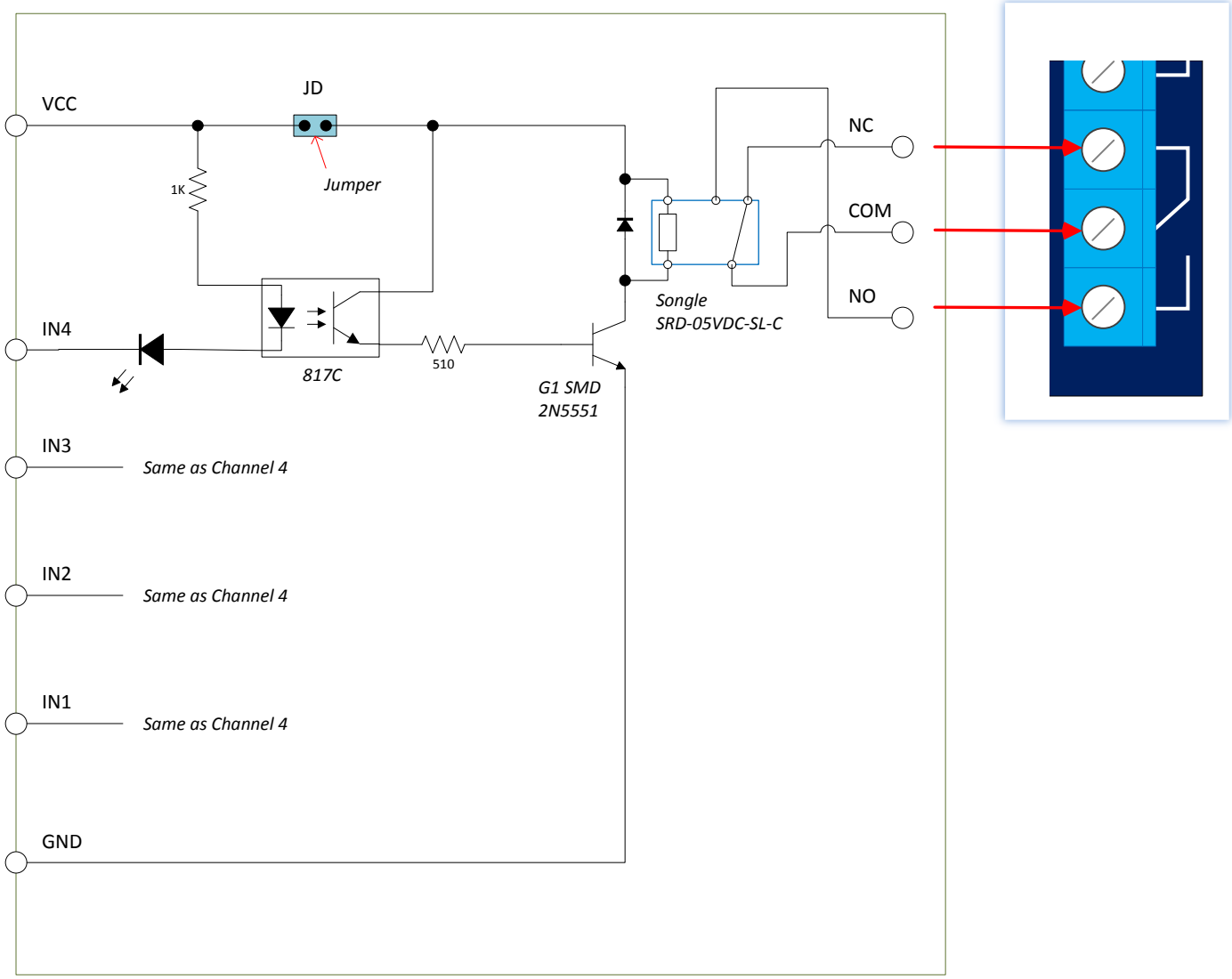

HENRY'S BENCH	TITLE	Drawn By:	DATE	PAGE	REVISED
	5V Four Channel Relay Schematic	H. Caouette	5/2/2015	1 OF 1	8/3/2014