MAXIM

Quad SPDT CMOS Analog Switch

MAX333

General Description

The MAX333 is a quad single-pole-double-throw (SPDT) analog switch. These four independent switches can be operated with bipolar power supplies ranging from ±5V to ±18V, or single-ended power supplies of +10V to +30V.

The MAX333 has break-before-make switching, (200ns typical), a maximum turn-off time of 500ns, and a maximum turn-on time of 1000ns.

The MAX333 is ideal for portable operation since quiescent current is only 250μA maximum with all inputs high, and less with all inputs low.

Logic inputs are fully TTL and CMOS compatible and guaranteed over a +0.8V to +2.4V range, regardless of supply voltage. Logic inputs and switched analog signals can range anywhere between the supply voltages without damage. The MAX333 is a low-cost replacement for a DG211/DG212 pair when used as a quad SPDT switch.

Applications

Winchester Disk Drives

Test Equipment

Communications Systems

PBX, PABX

Head up Displays

Portable Instruments

Pin Configuration

TOP VIEW

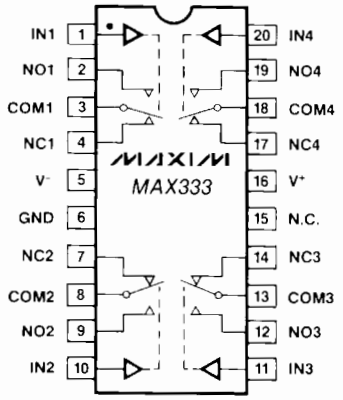

SWITCHES ARE SHOWN WITH LOGICAL 0 INPUT

Features

- Low Cost Per Channel
- Four Independent SPDT Switches
- Break-Before-Make Switching
- Guaranteed ±5V to ±18V Operation
- Guaranteed +10V to +30V Operation (Single Supply)
- No Separate Logic Supply Required
- CMOS and TTL Logic Compatible
- Monolithic, Low Power CMOS Design

Ordering Information

PART	TEMP. RANGE	PACKAGE
MAX333CPP	0°C to +70°C	20 Lead Plastic DIP
MAX333C/D	0°C to +70°C	Dice
MAX333EPP	-40°C to +85°C	20 Lead Plastic DIP
MAX333MJP	-55°C to +125°C	20 Lead CERDIP
MAX333CWP	0°C to +70°C	20 Lead Wide SO
MAX333EWP	-40°C to +85°C	20 Lead Wide SO

Typical Operating Circuit

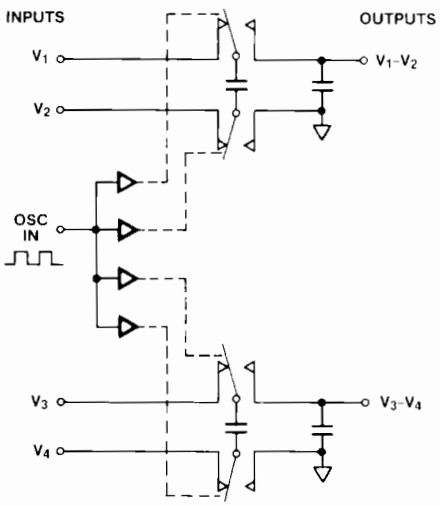

FLYING CAPACITOR LEVEL TRANSLATOR (2-CHANNEL)

Call toll free 1-800-998-8800 for free samples or literature.

Quad SPDT CMOS Analog Switch

ABSOLUTE MAXIMUM RATINGS

V^- to V^- 36V
V_{IN}, V_{COM}, V_{NO} or V_{NC} ..... V^- to V^+
$|V_{NO} - V_{NC}|$ 32V
V^+ to Ground 30V
V^- to Ground ..... -30V
Current, Any Terminal Except V_{COM}, V_{NO}, or V_{NC} .. 30mA
Continuous Current, V_{COM}, V_{NO} or V_{NC} 20mA
Peak Current, V_{COM}, V_{NO} or V_{NC}
(Pulsed at 1msec, 10% duty cycle max) 70mA

Storage Temperature ..... -65°C to +150°C
Power Dissipation (Note 1)
20 Pin CERDIP (Note 2) 900mW
20 Pin Plastic DIP (Note 3) 600mW
20 Pin Small Outline (WE) (Note 4) 800mW

Note 1: Device mounted with all leads soldered to PC board.
Note 2: Derate 11.1mW/°C above 70°C.
Note 3: Derate 8mW/°C above 70°C.
Note 4: Derate 10mW/°C above 70°C.

Stresses above those listed under "Absolute Maximum Ratings" may cause permanent damage to the device. These are stress ratings only, and functional operation of the device at these or any other conditions above those indicated in the operational sections of the specifications is not implied. Exposure to absolute maximum ratings conditions for extended periods may affect device reliability.

ELECTRICAL CHARACTERISTICS

(GND = 0V, V^+ = +15V, V^- = -15V, T_A = +25°C, unless otherwise indicated)

PARAMETER	SYMBOL	TEST CONDITIONS	LIMITS MIN (Note 5)	TYP (Note 6)	MAX	UNITS
SUPPLY						
Positive Supply Current	I^-			0.13	0.25	mA
Supply Voltage Range	V^+/V^-	Dual Supply; $\|V^+\| = \|V^-\|$	±5		±18	V
Supply Voltage Range	V^+	Single Supply; V^- = GND	+10		+30	V
Negative Supply Current	I^-			0.01	0.25	mA
LOGIC INPUT						
Input Voltage Low	V_{IL}		V^-		+0.8	V
Input Voltage High	V_{IH}		2.4		V^+	V
Input Current	I_{IN}	$V_{IN} = V^-, V^+$	-10	0.0001	+10	μA
SWITCH						
Analog Signal Range	V_{ANA}		V^-		V^+	V
ON Circuit Resistance	R_{ON}	V_{ANA} = +10V; I_{COM} = 1mA V_{ANA} = -10V; I_{COM} = 1mA		140 125	175 175	Ω Ω
ON Circuit Leakage Current	I_{ONL}	V_{ANA} = +14V; V_{OFF} = -14V V_{ANA} = -14V; V_{OFF} = +14V	-5 -5	0.1 0.2	+5 +5	nA nA
OFF Circuit Leakage Current	I_{OFF}	V_{ANA} = +14V; V_{OFF} = -14V V_{ANA} = -14V; V_{OFF} = +14V	-5 -5	0.01 0.02	+5 +5	nA nA
DYNAMIC						
Turn-off Time	t_{OFF}	(See Switching Time Test Circuit)		50	500	ns
Turn-on Time	t_{ON}			460	1000	ns
Break-before-make Time	t_{OPEN}		50	200		ns
Off Capacitance	C_{OFF}	V_{ANA} = 0V		5		pF
On Capacitance	C_{ON}	V_{ANA} = 0V		5		pF
Off Isolation	OIRR	f = 1MHz, Rl = 75Ω V_{ANA} = 2.3V_{RMS}		72		dB
Crosstalk	CCRR			78		dB

Note 5: The algebraic convention whereby the most negative value is a minimum, and the most positive is a maximum, is used in this data sheet.
Note 6: Typical values are for DESIGN AID ONLY, not guaranteed nor subject to production testing.

ELECTRICAL CHARACTERISTICS

(GND = 0V, V^+ = +15V, V^- = -15V, T_A = Full Operating Temperature Range, unless otherwise indicated)

PARAMETER	SYMBOL	TEST CONDITIONS	LIMITS MIN (Note 5)	TYP (Note 6)	MAX	UNITS
LOGIC INPUT						
Input Voltage Low	V_{IL}		V^-		+0.8	V
Input Voltage High	V_{IH}		2.4		V^+	V
Input Current	I_{IN}	V_{IN} = V^-, V^+	-10	0.0001	+10	μA
SWITCH						
Analog Signal Range	V_{ANA}		V^-		V^+	V
ON Circuit Resistance	R_{ON}	V_{ANA} = +10V; I_{COM} = 1mA V_{ANA} = -10V; I_{COM} = 1mA		200 180	250 250	Ω Ω
ON Circuit Leakage Current	I_{ONL}	V_{ANA} = +15V; V_{OFF} = -15V V_{ANA} = -15V; V_{OFF} = +15V		200 200		nA nA
OFF Circuit Leakage Current	I_{OFF}	V_{ANA} = +15V; V_{OFF} = -15V V_{ANA} = -15V; V_{OFF} = +15V		100 100		nA nA

Switching Time Test Circuit

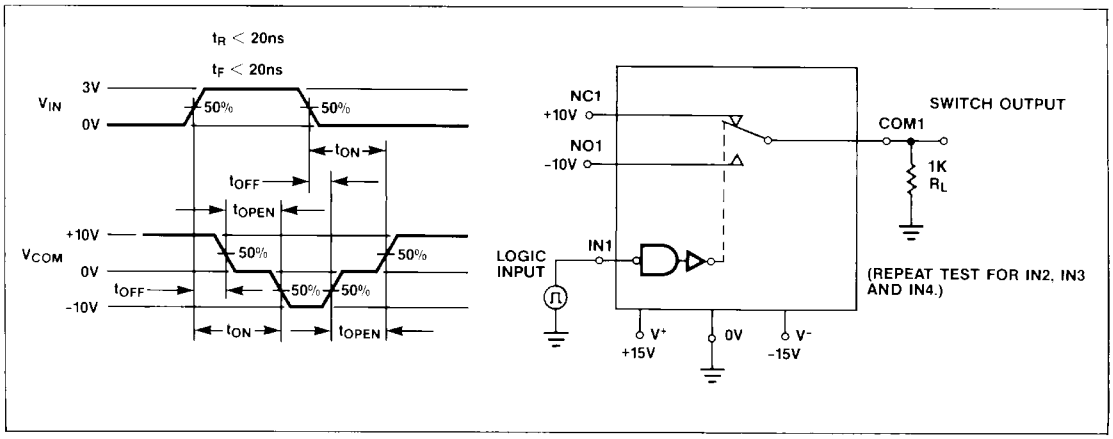

TYPICAL RDS(ON) & SUPPLY CURRENT VS. POWER SUPPLY VOLTAGE

Power Supply Voltage	R_{ON} at Analog Signal Levels (Ω) -15V	-10V	-5V	0V	+5V	+10V	+15V	Quiescent Supply Current (μA)	Charge Injection (pC)
V^- = -15V, V^+ = +15V	117			109			153	130	12
V^- = -10V, V^+ = +10V		158		156		171		80	10
V^- = -5V, V^+ = +5V			297	303	288			30	8
V^- = GND, V^+ = +15V				200			212	115	
V^- = GND, V^+ = +10V				300	312	303		30	

Quad SPDT CMOS Analog Switch

ELECTRICAL CHARACTERISTICS (Single Supply)

(GND = 0V, V^+ = +12V, V^- = 0V, T_A = 25°C, unless otherwise indicated)

PARAMETER	SYMBOL	TEST CONDITIONS	LIMITS MIN (Note 5)	TYP (Note 6)	MAX	UNITS
SUPPLY						
Supply Voltage Range	V^+	Single Supply; V^- = GND	+10		+30	V
Positive Supply Current	I^+			0.11	0.25	mA
INPUT						
Input Voltage Low	V_{INLO}		0		+0.8	V
Input Voltage High	V_{INHI}		2.4		V^+	V
Input Current	I_{IN}	V_{IN} = V^+, 0V			1	μA
SWITCH						
Analog Signal Range	V_{ANA}		V^-		V^+	V
ON Circuit Resistance	R_{ON}	V_{ANA} = +10V; I_{COM} = 1mA V_{ANA} = 0V; I_{COM} = 1mA		250 240	350 350	Ω Ω
ON Circuit Leakage Current	I_{ONL}	V_{ANA} = V^+; V_{OFF} = 0V V_{ANA} = 0V; V_{OFF} = V^+		0.05 0.05		nA nA
OFF Circuit Leakage Current	I_{OFF}	V_{ANA} = V^+ V_{ANA} = 0V		0.01 0.01		nA nA
DYNAMIC						
Turn-off Time	t_{OFF}	(See Switching Time Test Circuit)		65		ns
Turn-on Time	t_{ON}			700		ns
Break-before-make Time	t_{OPEN}			200		ns
Off Isolation	OIRR	f = 1MHz, Rl = 75Ω V_{ANA} = 2.3V_{RMS}		70		dB
Crosstalk	CCRR			72		dB

Note 5: The algebraic convention whereby the most negative value is a minimum, and the most positive is a maximum, is used in this data sheet.

Note 6: Typical values are for DESIGN AID ONLY, not guaranteed nor subject to production testing.

Protecting Against Fault Conditions

Fault conditions occur when power supplies are turned off when input signals are still present or when over voltages occur at the inputs during normal operation. In either case, source-to-body diodes can be forward biased and conduct current from the signal source. If this current is required to be kept to low (μA) levels then the addition of external protection diodes is recommended.

To provide protection for over-voltages up to 20V above the supplies, 1N4001 or 1N914 type diodes should be placed in series with the positive and negative supplies. The addition of these diodes will reduce the analog signal range to 1 volt below the positive supply and 1 volt above the negative supply.

Chip Topography

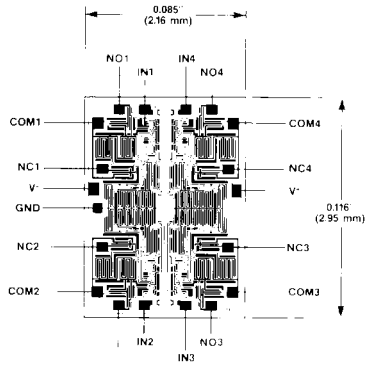

NOTE: NCx IS CONNECTED TO COMx WHEN INx IS LOW.

Maxim cannot assume responsibility for use of any circuitry other than circuitry entirely embodied in a Maxim product. No circuit patent licenses are implied. Maxim reserves the right to change the circuitry and specifications without notice at any time.

© 1995 Maxim Integrated Products Printed USA MAXIM is a registered trademark of Maxim Integrated Products.