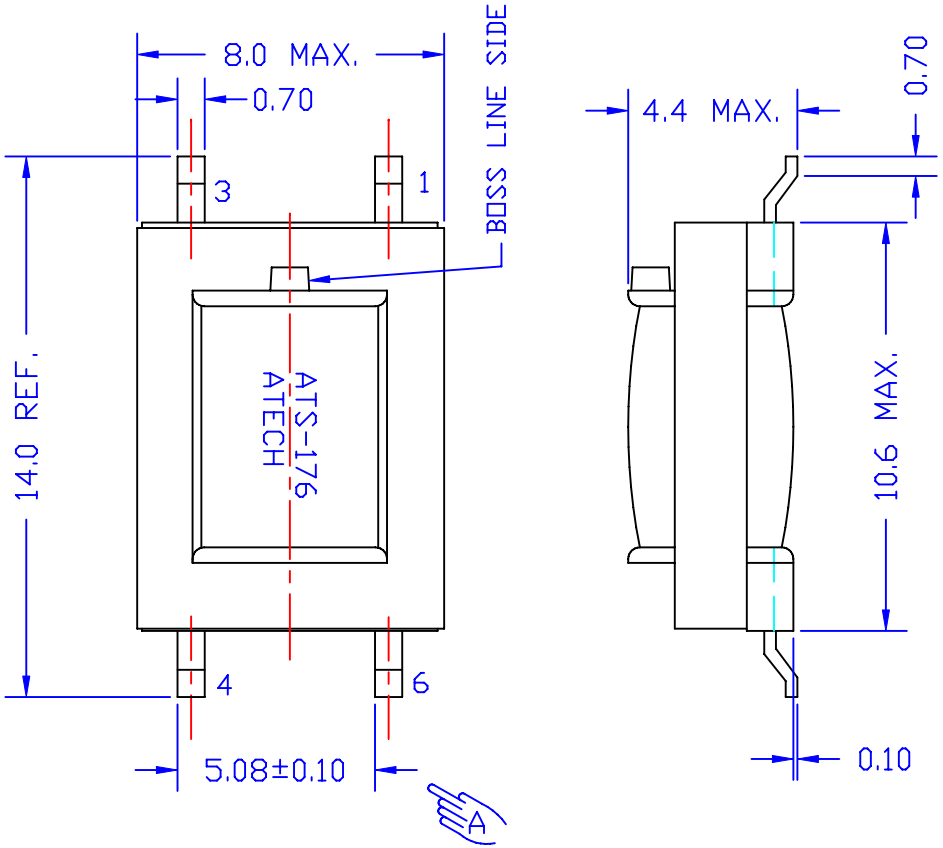

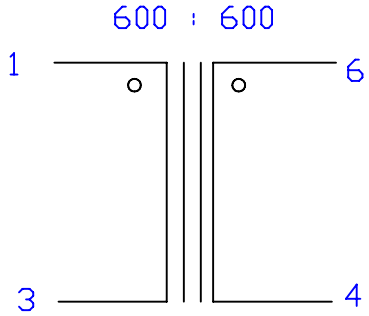

ELECTRICAL CHARACTERISTICS:

1. D.C.R. PIN 1-3 = 48 OHM +/-10% PIN 4-6 = 42 OHM +/-10%
2. INDUCTANCE (@250HZ, 0.5Vrms, PARALLEL) 1-3 = 1.5H MIN.
3. IMPEDANCE (@1KHZ, 0dBm, 4-6 W/H 600 OHM LOAD)
   1-3 = 600 OHM +/-10%
4. INSERTION LOSS = 1.0 dB MAX.
   (AT 1KHZ, 0dBm, W/H 600 OHM LOAD)
5. FREQ. RESP. (@ 300HZ TO 4KHZ, REF. 1KHZ) = +/-0.35dB
6. RETURN LOSS @300HZ = 20dB MIN. @1KHZ = 23dB MIN.
   @4KHZ = 23dB MIN.
7. TURN RATIO = 1:1 +/-1%
8. POLARITY = PIN 1-6 INPHASE
9. LONGITUDINAL BAL. = 70dB MIN. (@ 200HZ TO 4KHZ)
10. HI-POT = 1250 VAC, 1mA, 2SEC. (PRI. -SEC.)

NO.	DESCRIPTION	DATE	BY	CHK	APPD
B	ADD UL	06/18/98	PAIR		SUEDY
A	5.08±0.10				
	RELEASE		PAIR		SUEDY

REVISIONS

Atech®
Atech Technology Co., Ltd.
TEL:(02)2794-6667 FAX:(02)2794-8004

TITLE 600 : 600 TRANSFORMER
DWG. NO. ATS-176
UNITS: M/M
SAFETY
SHEET 1 OF 1
DATE
P/N: CTP30800RA
DRAW Pair