ESP32-C6-MINI-1
ESP32-C6-MINI-1U

Datasheet Version 1.3

Module that supports 2.4 GHz Wi-Fi 6 (802.11ax), Bluetooth® 5 (LE), Zigbee and Thread (802.15.4)
Built around ESP32-C6 series of SoCs, 32-bit RISC-V single-core microprocessor
Flash up to 8 MB in chip package
22 GPIOs, rich set of peripherals
On-board PCB antenna or external antenna connector



ESP32-C6-MINI-1



ESP32-C6-MINI-1U

ESPRESSIF

1 Module Overview

Note:

Check the link or the QR code to make sure that you use the latest version of this document:
https://espressif.com/documentation/esp32-c6-mini-1_mini-1u_datasheet_en.pdf

1.1 Features

CPU and On-Chip Memory

- ESP32-C6FH4/ESP32-C6FH8 embedded, 32-bit RISC-V single-core microprocessor, up to 160 MHz
- ROM: 320 KB
- HP SRAM: 512 KB
- LP SRAM: 16 KB
- Flash up to 8 MB in chip package

Wi-Fi

- 1T1R in 2.4 GHz band
- Operating frequency: 2412 ~ 2484 MHz
- IEEE 802.11ax-compliant
  - 20 MHz-only non-AP mode
  - MCS0 ~ MCS9
  - Uplink and downlink OFDMA, especially suitable for simultaneous connections in high-density environments
  - Downlink MU-MIMO (multi-user, multiple input, multiple output) to increase network capacity
  - Beamformee that improves signal quality
  - Channel quality indication (CQI)
  - DCM (dual carrier modulation) to improve link robustness
  - Spatial reuse to maximize parallel transmissions
  - Target wake time (TWT) that optimizes power saving mechanisms
- Fully compatible with IEEE 802.11b/g/n protocol
  - 20 MHz and 40 MHz bandwidth
  - Data rate up to 150 Mbps
  - Wi-Fi Multimedia (WMM)
  - TX/RX A-MPDU, TX/RX A-MSDU
  - Immediate Block ACK
  - Fragmentation and defragmentation
  - Transmit opportunity (TXOP)
  - Automatic Beacon monitoring (hardware TSF)
  - 4 × virtual Wi-Fi interfaces
  - Simultaneous support for Infrastructure BSS in Station mode, SoftAP mode, Station + SoftAP mode, and promiscuous mode
    Note that when ESP32-C6 scans in Station mode, the SoftAP channel will change along with the Station channel
  - 802.11mc FTM

Bluetooth®

- Bluetooth LE: Bluetooth 5.3 certified
- Bluetooth mesh
- High power mode (20 dBm)
- Speed: 125 Kbps, 500 Kbps, 1 Mbps, 2 Mbps
- Advertising extensions
- Multiple advertisement sets

- Channel selection algorithm #2
- LE power control
- Internal co-existence mechanism between Wi-Fi and Bluetooth to share the same antenna

IEEE 802.15.4

- Compliant with IEEE 802.15.4-2015 protocol
- OQPSK PHY in 2.4 GHz band
- Data rate: 250 Kbps
- Thread 1.3
- Zigbee 3.0

Peripherals

- GPIO, SPI, parallel IO interface, UART, I2C, I2S, RMT (TX/RX), pulse counter, LED PWM, USB Serial/JTAG controller, MCPWM, SDIO2.0 slave controller, GDMA, TWAI® controller, on-chip debug functionality via JTAG, event task matrix, ADC, temperature sensor, system timer, general-purpose timers, and watchdog timers

Integrated Components on Module

- 40 MHz crystal oscillator

Antenna Options

- On-board PCB antenna (ESP32-C6-MINI-1)
- External antenna via a connector (ESP32-C6-MINI-1U)

Operating Conditions

- Operating voltage/Power supply: 3.0 ~ 3.6 V
- Operating ambient temperature:
  - 85 °C version module: –40 ~ 85 °C
  - 105 °C version module: –40 ~ 105 °C

Certification

- RF certification: See certificates
- Green certification: RoHS/REACH

Test

- HTOL/HTSL/uHAST/TCT/ESD

1.2 Series Comparison

ESP32-C6-MINI-1 and ESP32-C6-MINI-1U are two powerful, general-purpose Wi-Fi, IEEE 802.15.4, and Bluetooth LE modules. The rich set of peripherals and high performance make the module an ideal choice for smart homes, industrial automation, health care, consumer electronics, etc.

ESP32-C6-MINI-1 comes with a PCB antenna. ESP32-C6-MINI-1U comes with a connector for an external antenna. They both feature an SPI flash up to 8 MB.

The series comparison for the two modules is as follows:

Table 1: ESP32-C6-MINI-1 (ANT) Series Comparison[1]

Ordering Code	Flash[2,3]	Ambient Temp.[4] (°C)	Size[5] (mm)
ESP32-C6-MINI-1-N4	4 MB (Quad SPI)	−40 ~ 85	13.2 × 16.6 × 2.4
ESP32-C6-MINI-1-H4		−40 ~ 105	
ESP32-C6-MINI-1-H8	8 MB (Quad SPI)		

[1] This table shares the same notes presented in Table 2 below.

Table 2: ESP32-C6-MINI-1U (CONN) Series Comparison

Ordering Code	Flash[2,3]	Ambient Temp.[4] (°C)	Size[5] (mm)
ESP32-C6-MINI-1U-N4	4 MB (Quad SPI)	−40 ~ 85	13.2 × 12.5 × 2.4
ESP32-C6-MINI-1U-H4		−40 ~ 105	
ESP32-C6-MINI-1U-H8	8 MB (Quad SPI)		

[2] By default, the SPI flash on the module operates at a maximum clock frequency of 80 MHz and does not support the auto suspend feature. If you need the flash auto suspend feature, please contact us.

[3] The flash is integrated in the chip's package.

[4] Ambient temperature specifies the recommended temperature range of the environment immediately outside the Espressif module.

[5] For details, refer to Section 10.1 *Module Dimensions*.

At the core of the modules is ESP32-C6FH4/ESP32-C6FH8, a 32-bit RISC-V single-core processor. For more information on ESP32-C6FH4/ESP32-C6FH8, please refer to *ESP32-C6 Series Datasheet*.

1.3 Applications

- Smart Home
- Industrial Automation
- Health Care
- Consumer Electronics
- Smart Agriculture
- POS Machines
- Service Robot
- Audio Devices
- Generic Low-power IoT Sensor Hubs
- Generic Low-power IoT Data Loggers

Contents

1 Module Overview 2
1.1 Features 2
1.2 Series Comparison 3
1.3 Applications 4
2 Block Diagram 9
3 Pin Definitions 10
3.1 Pin Layout 10
3.2 Pin Description 10
4 Boot Configurations 12
4.1 Chip Boot Mode Control 13
4.2 SDIO Sampling and Driving Clock Edge Control 14
4.3 ROM Messages Printing Control 14
4.4 JTAG Signal Source Control 15
5 Peripherals 16
5.1 Peripheral Overview 16
5.2 Peripheral Description 16
5.2.1 Connectivity Interface 16
5.2.1.1 UART Controller 16
5.2.1.2 SPI Controller 17
5.2.1.3 I2C Controller 18
5.2.1.4 I2S Controller 18
5.2.1.5 Pulse Count Controller 19
5.2.1.6 USB Serial/JTAG Controller 19
5.2.1.7 Two-wire Automotive Interface 20
5.2.1.8 SDIO 2.0 Slave Controller 20
5.2.1.9 LED PWM Controller 21
5.2.1.10 Motor Control PWM 21
5.2.1.11 Remote Control Peripheral 22
5.2.1.12 Parallel IO Controller 23
5.2.2 Analog Signal Processing 23
5.2.2.1 SAR ADC 23
5.2.2.2 Temperature Sensor 24
6 Electrical Characteristics 25
6.1 Absolute Maximum Ratings 25
6.2 Recommended Operating Conditions 25
6.3 DC Characteristics (3.3 V, 25 °C) 25
6.4 Current Consumption Characteristics 26
6.4.1 Current Consumption in Active Mode 26

6.4.2 Current Consumption in Other Modes 27

7 RF Characteristics 28
7.1 Wi-Fi Radio 28
7.1.1 Wi-Fi RF Transmitter (TX) Characteristics 28
7.1.2 Wi-Fi RF Receiver (RX) Characteristics 29
7.2 Bluetooth 5 (LE) Radio 31
7.2.1 Bluetooth LE RF Transmitter (TX) Characteristics 31
7.2.2 Bluetooth LE RF Receiver (RX) Characteristics 32
7.3 802.15.4 Radio 34
7.3.1 802.15.4 RF Transmitter (TX) Characteristics 35
7.3.2 802.15.4 RF Receiver (RX) Characteristics 35

8 Module Schematics 36

9 Peripheral Schematics 38

10 Physical Dimensions 39
10.1 Module Dimensions 39
10.2 Dimensions of External Antenna Connector 40

11 PCB Layout Recommendations 41
11.1 PCB Land Pattern 41
11.2 Module Placement for PCB Design 42

12 Product Handling 43
12.1 Storage Conditions 43
12.2 Electrostatic Discharge (ESD) 43
12.3 Reflow Profile 43
12.4 Ultrasonic Vibration 44

Related Documentation and Resources 45

Revision History 46

List of Tables

1	ESP32-C6-MINI-1 (ANT) Series Comparison[1]	4
2	ESP32-C6-MINI-1U (CONN) Series Comparison	4
3	Pin Definitions	10
4	Default Configuration of Strapping Pins	12
5	Description of Timing Parameters for the Strapping Pins	13
6	Chip Boot Mode Control	13
7	SDIO Input Sampling Edge/Output Driving Edge Control	14
8	UART0 ROM Message Printing Control	14
9	USB Serial/JTAG ROM Message Printing Control	15
10	JTAG Signal Source Control	15
11	Absolute Maximum Ratings	25
12	Recommended Operating Conditions	25
13	DC Characteristics (3.3 V, 25 °C)	25
14	Current Consumption for Wi-Fi (2.4 GHz) in Active Mode	26
15	Current Consumption for Bluetooth LE in Active Mode	26
16	Current Consumption for 802.15.4 in Active Mode	26
17	Current Consumption in Modem-sleep Mode	27
18	Current Consumption in Low-Power Modes	27
19	Wi-Fi RF Characteristics	28
20	TX Power with Spectral Mask and EVM Meeting 802.11 Standards	28
21	TX EVM Test[1]	28
22	RX Sensitivity	29
23	Maximum RX Level	30
24	RX Adjacent Channel Rejection	30
25	Bluetooth LE RF Characteristics	31
26	Bluetooth LE - Transmitter Characteristics - 1 Mbps	31
27	Bluetooth LE - Transmitter Characteristics - 2 Mbps	31
28	Bluetooth LE - Transmitter Characteristics - 125 Kbps	32
29	Bluetooth LE - Transmitter Characteristics - 500 Kbps	32
30	Bluetooth LE - Receiver Characteristics - 1 Mbps	32
31	Bluetooth LE - Receiver Characteristics - 2 Mbps	33
32	Bluetooth LE - Receiver Characteristics - 125 Kbps	34
33	Bluetooth LE - Receiver Characteristics - 500 Kbps	34
34	802.15.4 RF Characteristics	34
35	802.15.4 Transmitter Characteristics - 250 Kbps	35
36	802.15.4 Receiver Characteristics - 250 Kbps	35

List of Figures

1 ESP32-C6-MINI-1 Block Diagram 9
2 ESP32-C6-MINI-1U Block Diagram 9
3 Pin Layout (Top View) 10
4 Visualization of Timing Parameters for the Strapping Pins 13
5 ESP32-C6-MINI-1 Schematics 36
6 ESP32-C6-MINI-1U Schematics 37
7 Peripheral Schematics 38
8 ESP32-C6-MINI-1 Physical Dimensions 39
9 ESP32-C6-MINI-1U Physical Dimensions 39
10 Dimensions of External Antenna Connector 40
11 ESP32-C6-MINI-1 Recommended PCB Land Pattern 41
12 ESP32-C6-MINI-1U Recommended PCB Land Pattern 42
13 Reflow Profile 43

2 Block Diagram

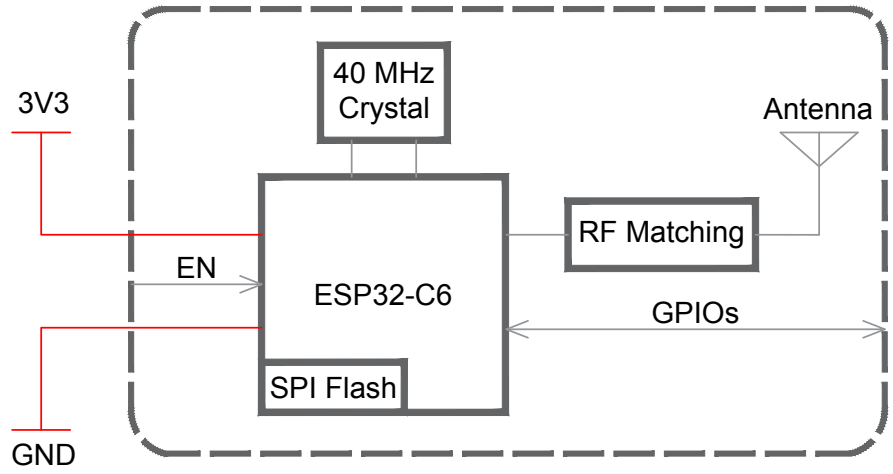

Figure 1: ESP32-C6-MINI-1 Block Diagram

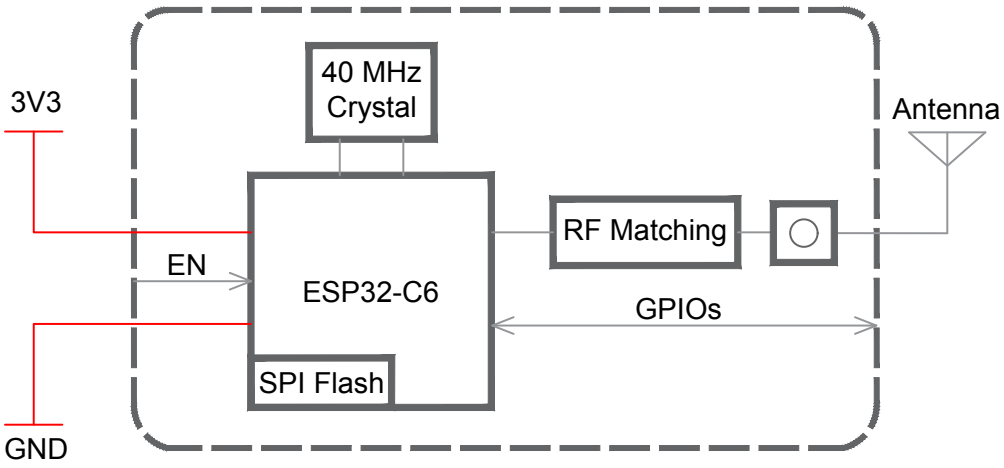

Figure 2: ESP32-C6-MINI-1U Block Diagram

3 Pin Definitions

3.1 Pin Layout

The pin diagram below shows the approximate location of pins on the module. For the actual diagram drawn to scale, please refer to Figure 10.1 *Module Dimensions*.

The pin diagram is applicable for ESP32-C6-MINI-1 and ESP32-C6-MINI-1U, but the latter has no keepout zone.

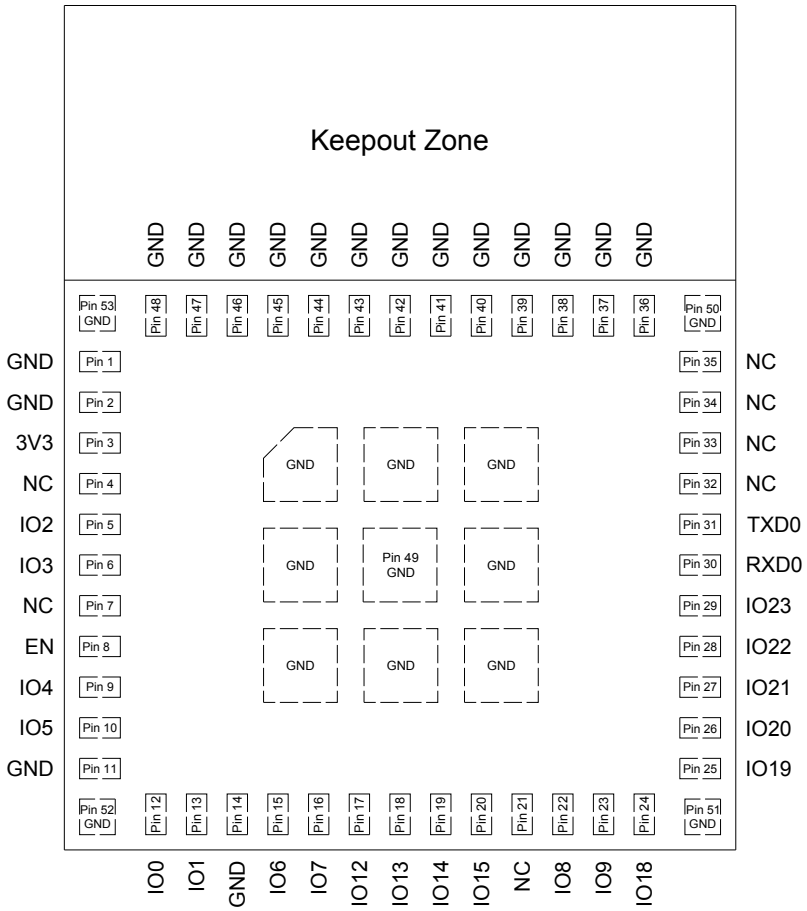

Figure 3: Pin Layout (Top View)

3.2 Pin Description

The module has 53 pins. See pin definitions in Table 3 *Pin Definitions*.

For peripheral pin configurations, please refer to *ESP32-C6 Series Datasheet*.

Table 3: Pin Definitions

Name	No.	Type[1]	Function
GND	1, 2, 11, 14, 36~53	P	Ground
3V3	3	P	Power supply

Cont'd on next page

Table 3 – cont'd from previous page

Name	No.	Type[1]	Function
NC	4	—	NC
IO2	5	I/O/T	GPIO2, LP_GPIO2, LP_UART_RTSN, ADC1_CH2, FSPIQ
IO3	6	I/O/T	GPIO3, LP_GPIO3, LP_UART_CTSN, ADC1_CH3
NC	7	—	NC
EN	8	I	High: on, enables the chip. Low: off, the chip powers off. Note: Do not leave the EN pin floating.
IO4	9	I/O/T	MTMS, GPIO4, LP_GPIO4, LP_UART_RXD, ADC1_CH4, FSPIHD
IO5	10	I/O/T	MTDI, GPIO5, LP_GPIO5, LP_UART_TXD, ADC1_CH5, FSPIWP
IO0	12	I/O/T	GPIO0, XTAL_32K_P, LP_GPIO0, LP_UART_DTRN, ADC1_CH0
IO1	13	I/O/T	GPIO1, XTAL_32K_N, LP_GPIO1, LP_UART_DSRN, ADC1_CH1
IO6	15	I/O/T	MTCK, GPIO6, LP_GPIO6, LP_I2C_SDA, ADC1_CH6, FSPICLK
IO7	16	I/O/T	MTDO, GPIO7, LP_GPIO7, LP_I2C_SCL, FSPID
IO12	17	I/O/T	GPIO12, USB_D-
IO13	18	I/O/T	GPIO13, USB_D+
IO14	19	I/O/T	GPIO14
IO15	20	I/O/T	GPIO15
NC	21	—	NC
IO8	22	I/O/T	GPIO8
IO9	23	I/O/T	GPIO9
IO18	24	I/O/T	GPIO18, SDIO_CMD, FSPICS2
IO19	25	I/O/T	GPIO19, SDIO_CLK, FSPICS3
IO20	26	I/O/T	GPIO20, SDIO_DATA0, FSPICS4
IO21	27	I/O/T	GPIO21, SDIO_DATA1, FSPICS5
IO22	28	I/O/T	GPIO22, SDIO_DATA2
IO23	29	I/O/T	GPIO23, SDIO_DATA3
RXD0	30	I/O/T	U0RXD, GPIO17, FSPICS1
TXD0	31	I/O/T	U0TXD, GPIO16, FSPICS0
NC	32	—	NC
NC	33	—	NC
NC	34	—	NC
NC	35	—	NC

[1] P: power supply; I: input; O: output; T: high impedance.

4 Boot Configurations

Note:
The content below is excerpted from *ESP32-C6 Series Datasheet* > Section *Boot Configurations via Strapping Pins and eFuses*. For the strapping pin mapping between the chip and modules, please refer to Chapter *8 Module Schematics*.

The module allows for configuring the following boot parameters through strapping pins and eFuse parameters at power-up or a hardware reset, without microcontroller interaction.

- **Chip boot mode**
  - Strapping pin: GPIO8 and GPIO9
- **SDIO Sampling and Driving Clock Edge**
  - Strapping pin: MTMS and MTDI
- **ROM message printing**
  - Strapping pin: GPIO8
  - eFuse parameter: EFUSE_UART_PRINT_CONTROL and EFUSE_DIS_USB_SERIAL_JTAG_ROM_PRINT
- **JTAG signal source**
  - Strapping pin: GPIO15
  - eFuse parameter: EFUSE_DIS_PAD_JTAG, EFUSE_DIS_USB_JTAG, and EFUSE_JTAG_SEL_ENABLE

The default values of all the above eFuse parameters are 0, which means that they are not burnt. Given that eFuse is one-time programmable, once programmed to 1, it can never be reverted to 0. For how to program eFuse parameters, please refer to *ESP32-C6 Technical Reference Manual* > Chapter *eFuse Controller*.

The default values of the strapping pins, namely the logic levels, are determined by pins' internal weak pull-up/pull-down resistors at reset if the pins are not connected to any circuit, or connected to an external high-impedance circuit.

Table 4: Default Configuration of Strapping Pins

Strapping Pin	Default Configuration	Bit Value
MTMS	Floating	–
MTDI	Floating	–
GPIO8	Floating	–
GPIO9	Weak pull-up	1
GPIO15	Floating	–

To change the bit values, the strapping pins should be connected to external pull-down/pull-up resistances. If the ESP32-C6 is used as a device by a host MCU, the strapping pin voltage levels can also be controlled by the host MCU.

All strapping pins have latches. At system reset, the latches sample the bit values of their respective strapping pins and store them until the chip is powered down or shut down. The states of latches cannot be changed in

any other way. It makes the strapping pin values available during the entire chip operation, and the pins are freed up to be used as regular IO pins after reset.

The timing of signals connected to the strapping pins should adhere to the *setup time* and *hold time* specifications in Table 5 and Figure 4.

Table 5: Description of Timing Parameters for the Strapping Pins

Parameter	Description	Min (ms)
t_{SU}	*Setup time* is the time reserved for the power rails to stabilize before the CHIP_PU pin is pulled high to activate the chip.	0
t_{H}	*Hold time* is the time reserved for the chip to read the strapping pin values after CHIP_PU is already high and before these pins start operating as regular IO pins.	3

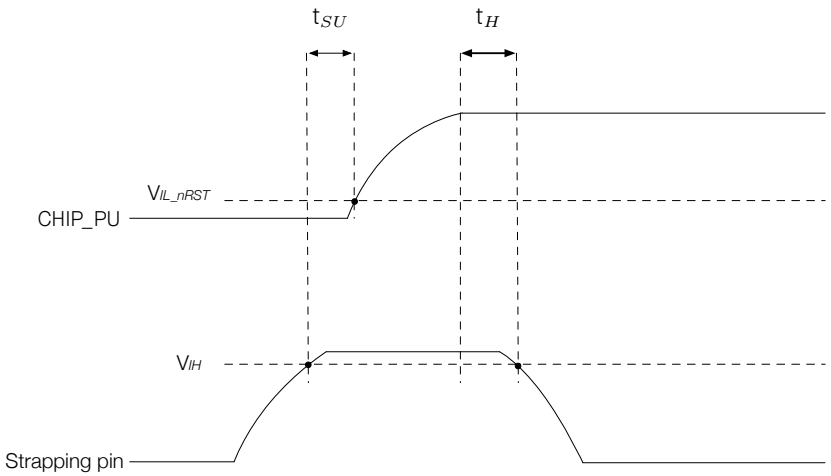

Figure 4: Visualization of Timing Parameters for the Strapping Pins

4.1 Chip Boot Mode Control

GPIO8 and GPIO9 control the boot mode after the reset is released. See Table 6 *Chip Boot Mode Control*.

Table 6: Chip Boot Mode Control

Boot Mode	GPIO8	GPIO9
SPI boot mode	Any value	**1**
Joint download boot mode[2]	1	0

[1] **Bold** marks the default value and configuration.

[2] Joint Download Boot mode supports the following download methods:

- USB-Serial-JTAG Download Boot
- UART Download Boot
- SDIO Download Boot

4.2 SDIO Sampling and Driving Clock Edge Control

The strapping pin MTMS and MTDI can be used to decide on which clock edge to sample signals and drive output lines. See Table 7 *SDIO Input Sampling Edge/Output Driving Edge Control*.

Table 7: SDIO Input Sampling Edge/Output Driving Edge Control

Edge behavior	MTMS	MTDI
Falling edge sampling, falling edge output	0	0
Falling edge sampling, rising edge output	0	1
Rising edge sampling, falling edge output	1	0
Rising edge sampling, rising edge output	1	1

[1] MTMS and MTDI are floating by default, so above are not default configurations.

4.3 ROM Messages Printing Control

During the boot process, ROM message printing is enabled if LP_AON_STORE4_REG[0] is 0 (default), and disabled if LP_AON_STORE4_REG[0] is 1. When ROM message printing is enabled, the messages can be printed to:

- **(Default) UART0 and USB Serial/JTAG controller**
- USB Serial/JTAG controller
- UART0

EFUSE_UART_PRINT_CONTROL and GPIO8 control ROM messages printing to **UART0** as shown in Table 8 *UART0 ROM Message Printing Control*.

Table 8: UART0 ROM Message Printing Control

UART0 ROM Code Printing	EFUSE_UART_PRINT_CONTROL	GPIO8
Enabled	**0**	Ignored
	1	0
	2	1
Disabled	1	1
	2	0
	3	Ignored

[1] **Bold** marks the default value and configuration.

EFUSE_DIS_USB_SERIAL_JTAG_ROM_PRINT controls the printing to **USB Serial/JTAG controller** as shown in Table 9 *USB Serial/JTAG ROM Message Printing Control*.

Table 9: USB Serial/JTAG ROM Message Printing Control

USB Serial/JTAG ROM Code Printing	EFUSE_DIS_USB_SERIAL_JTAG [2]	EFUSE_DIS_USB_SERIAL_JTAG_ROM_PRINT
Enabled	**0**	**0**
Disabled	0	1
	1	Ignored

[1] **Bold** marks the default value and configuration.

[2] EFUSE_DIS_USB_SERIAL_JTAG controls whether to disable USB Serial/JTAG.

4.4 JTAG Signal Source Control

The strapping pin GPIO15 can be used to control the source of JTAG signals during the early boot process. This pin does not have any internal pull resistors and the strapping value must be controlled by the external circuit that cannot be in a high impedance state.

As Table 10 *JTAG Signal Source Control* shows, GPIO15 is used in combination with EFUSE_DIS_PAD_JTAG, EFUSE_DIS_USB_JTAG and EFUSE_JTAG_SEL_ENABLE.

Table 10: JTAG Signal Source Control

JTAG Signal Source	EFUSE_DIS_PAD_JTAG	EFUSE_DIS_USB_JTAG	EFUSE_JTAG_SEL_ENABLE	GPIO15
USB Serial/JTAG Controller	**0**	**0**	**0**	Ignored
	0	0	1	1
	1	0	Ignored	Ignored
JTAG pins [2]	0	0	1	0
	0	1	Ignored	Ignored
JTAG is disabled	1	1	Ignored	Ignored

[1] **Bold** marks the default value and configuration.

[2] JTAG pins refer to MTDI, MTCK, MTMS, and MTDO.

5 Peripherals

5.1 Peripheral Overview

ESP32-C6FH4/ESP32-C6FH8 integrates a rich set of peripherals including SPI, parallel IO interface, UART, I2C, I2S, RMT (TX/RX), LED PWM, USB Serial/JTAG controller, MCPWM, SDIO2.0 slave controller, GDMA, TWAI® controller, on-chip debug functionality via JTAG, event task matrix, ADC, as well as up to 22 GPIOs, etc.

For detailed information about module peripherals, please refer to *ESP32-C6 Series Datasheet* > Section *Functional Description*. Note that the ADC measurement range and accuracy in the *ESP32-C6 Series Datasheet* are applicable to modules manufactured on and after the PW Number **PW-2023-06-XXX** on packaging labels. For modules manufactured earlier than these PW numbers, please ask our sales team to provide the actual range and accuracy according to batches.

Note:
The content below is sourced from *ESP32-C6 Series Datasheet* > Section *Peripherals*. Some information may not be applicable to ESP32-C6-MINI-1 and ESP32-C6-MINI-1U as not all the IO signals are exposed on the module.
To learn more about peripheral signals, please refer to *ESP32-C6 Technical Reference Manual* > Section *Peripheral Signal List*.

5.2 Peripheral Description

This section describes the chip's peripheral capabilities, covering connectivity interfaces and on-chip sensors that extend its functionality.

5.2.1 Connectivity Interface

This subsection describes the connectivity interfaces on the chip that enable communication and interaction with external devices and networks.

5.2.1.1 UART Controller

The UART Controller in the ESP32-C6 chip facilitates the transmission and reception of asynchronous serial data between the chip and external UART devices. It consists of two UARTs in the main system, and one low-power LP UART.

Feature List

- Programmable baud rates up to 5 MBaud
- RAM shared by TX FIFOs and RX FIFOs
- Support for various lengths of data bits and stop bits
- Parity bit support
- Special character AT_CMD detection
- RS485 protocol support (not supported by LP UART)
- IrDA protocol support (not supported by LP UART)

- High-speed data communication using GDMA (not supported by LP UART)
- Receive timeout feature
- UART as the wake-up source
- Software and hardware flow control

Pin Assignment

For details, see *ESP32-C6 Series Datasheet* > Section *Peripheral Pin Assignment*.

5.2.1.2 SPI Controller

ESP32-C6 has the following SPI interfaces:

- **SPI0** used by ESP32-C6's cache and GDMA to access in-package or off-package flash
- **SPI1** used by the CPU to access in-package or off-package flash
- **SPI2** is a general-purpose SPI controller with access to general-purpose DMA channels

SPI0 and SPI1 are reserved for system use, and only SPI2 is available for users.

Features of SPI0 and SPI1

- Supports Single SPI, Dual SPI, Quad SPI (QPI) modes
- Data transmission is in bytes

Features of SPI2

- Supports operation as a master or slave
- Support for GDMA
- Supports Single SPI, Dual SPI, Quad SPI (QPI) modes
- Configurable clock polarity (CPOL) and phase (CPHA)
- Configurable clock frequency
- Data transmission is in bytes
- Configurable read and write data bit order: most-significant bit (MSB) first, or least-significant bit (LSB) first
- As a master
  - Supports 2-line full-duplex communication with clock frequency up to 80 MHz
  - Supports 1-, 2-, 4-line half-duplex communication with clock frequency up to 80 MHz
  - Provides six FSPICS... pins for connection with six independent SPI slaves
  - Configurable CS setup time and hold time
- As a slave
  - Supports 2-line full-duplex communication with clock frequency up to 40 MHz

- Supports 1-, 2-, 4-line half-duplex communication with clock frequency up to 40 MHz

Pin Assignment

For details, see *ESP32-C6 Series Datasheet* > Section *Peripheral Pin Assignment*.

5.2.1.3 I2C Controller

The I2C Controller supports communication between the master and slave devices using the I2C bus.

Feature List

- Two I2C controllers: one in the main system and one in the low-power system
- Communication with multiple external devices
- Master and slave modes for I2C, and master mode only for LP I2C
- Standard mode (100 Kbit/s) and fast mode (400 Kbit/s)
- SCL clock stretching in slave mode
- Programmable digital noise filtering
- Support for 7-bit and 10-bit addressing, as well as dual address mode

Pin Assignment

For details, see *ESP32-C6 Series Datasheet* > Section *Peripheral Pin Assignment*.

5.2.1.4 I2S Controller

The I2S Controller in the ESP32-C6 chip provides a flexible communication interface for streaming digital data in multimedia applications, particularly digital audio applications.

Feature List

- Master mode and slave mode
- Full-duplex and half-duplex communications
- Separate TX and RX units that can work independently or simultaneously
- A variety of audio standards supported:
  - TDM Philips standard
  - TDM MSB alignment standard
  - TDM PCM standard
  - PDM standard
- PCM-to-PDM TX interface
- Configurable high-precision BCK clock, with frequency up to 40 MHz

  - Sampling frequencies can be 8 kHz, 16 kHz, 32 kHz, 44.1 kHz, 48 kHz, 88.2 kHz, 96 kHz, 128 kHz, 192 kHz, etc.
- 8-/16-/24-/32-bit data communication
- Direct Memory Access (DMA)
- A-law and □-law compression/decompression algorithms for improved signal-to-quantization noise ratio
- Flexible data format control

Pin Assignment

For details, see *ESP32-C6 Series Datasheet* > Section *Peripheral Pin Assignment*.

5.2.1.5 Pulse Count Controller

The Pulse Count Controller (PCNT) is designed to count input pulses by tracking rising and falling edges of the input pulse signal.

Feature List

- Four independent pulse counters with two channels each
- Counter modes: increment, decrement, or disable
- Glitch filtering for input pulse signals and control signals
- Selection between counting on rising or falling edges of the input pulse signal

Pin Assignment

For details, see *ESP32-C6 Series Datasheet* > Section *Peripheral Pin Assignment*.

5.2.1.6 USB Serial/JTAG Controller

The USB Serial/JTAG controller in the ESP32-C6 chip provides an integrated solution for communicating to the chip over a standard USB CDC-ACM serial port as well as a convenient method for JTAG debugging. It eliminates the need for external chips or JTAG adapters, saving space and reducing cost.

Feature List

- USB 2.0 full speed compliant, capable of up to 12 Mbit/s transfer speed (Note that this controller does not support the faster 480 Mbit/s high-speed transfer mode)
- CDC-ACM virtual serial port and JTAG adapter functionality
- CDC-ACM:
  - CDC-ACM adherent serial port emulation (plug-and-play on most modern OSes)
  - Host controllable chip reset and entry into download mode
- JTAG adapter functionality:
  - Fast communication with CPU debugging core using a compact representation of JTAG instructions

- Support for reprogramming of attached flash memory through the ROM startup code
- Internal PHY

Pin Assignment

For details, see *ESP32-C6 Series Datasheet* > Section *Peripheral Pin Assignment*.

5.2.1.7 Two-wire Automotive Interface

The Two-wire Automotive Interface (TWAI®) is a multi-master, multi-cast communication protocol designed for automotive applications. The TWAI controller facilitates the communication based on this protocol.

Feature List

- Compatible with ISO 11898-1 protocol (CAN Specification 2.0)
- Standard frame format (11-bit ID) and extended frame format (29-bit ID)
- Bit rates from 1 Kbit/s to 1 Mbit/s
- Multiple modes of operation: Normal, Listen Only, and Self-Test (no acknowledgment required)
- Special transmissions: Single-shot and Self Reception
- Acceptance filter (single and dual filter modes)
- Error detection and handling: error counters, configurable error warning limit, error code capture, arbitration lost capture, automatic transceiver standby

Pin Assignment

For details, see *ESP32-C6 Series Datasheet* > Section *Peripheral Pin Assignment*.

5.2.1.8 SDIO 2.0 Slave Controller

The SDIO 2.0 Slave Controller in the ESP32-C6 chip provides hardware support for the Secure Digital Input/Output (SDIO) device interface. It allows an SDIO host to access the ESP32-C6 via an SDIO bus protocol.

Feature List

- Compatible with SD Physical Layer Specification V2.00 and SDIO V2.00 specifications
- Support for SPI, 1-bit SDIO, and 4-bit SDIO transfer modes
- Clock range of 0 ~ 50 MHz
- Configurable sample and drive clock edge
- Integrated and SDIO-accessible registers for information interaction
- Support for SDIO interrupt mechanism
- Automatic padding data and discarding the padded data on the SDIO bus
- Block size up to 512 bytes

- Interrupt vector between the host and slave for bidirectional interrupt
- Support DMA for data transfer
- Support for wake-up from sleep when connection is retained

Pin Assignment

For details, see *ESP32-C6 Series Datasheet* > Section *Peripheral Pin Assignment*.

5.2.1.9 LED PWM Controller

The LED PWM Controller (LEDC) is designed to generate PWM signals for LED control.

Feature List

- Six independent PWM generators
- Maximum PWM duty cycle resolution of 20 bits
- Four independent timers with 20-bit counters, configurable fractional clock dividers and counter overflow values
- Adjustable phase of PWM signal output
- PWM duty cycle dithering
- Automatic duty cycle fading
  - Linear duty cycle fading — only one duty cycle range
  - Gamma curve fading — up to 16 duty cycle ranges for each PWM generator, with independently configured fading direction (increase or decrease), fading amount, number of fades, and fading frequency
- PWM signal output in low-power mode (Light-sleep mode)
- Event generation and task response achieved by the Event Task Matrix (ETM)

Pin Assignment

For details, see *ESP32-C6 Series Datasheet* > Section *Peripheral Pin Assignment*.

5.2.1.10 Motor Control PWM

The Motor Control Pulse Width Modulator (MCPWM) is designed for driving digital motors and smart light. The MCPWM is divided into five main modules: PWM timers, PWM operators, Capture module, Fault Detection module, and Event Task Matrix (ETM) module.

Feature List

- Three PWM timers for precise timing and frequency control
  - Every PWM timer has a dedicated 8-bit clock prescaler

  - The 16-bit counter in the PWM timer can work in count-up mode, count-down mode, or count-up-down mode
  - Hardware or software synchronization to trigger a reload on the PWM timer or the prescaler's restart, with selectable hardware synchronization source
- Three PWM operators for generating waveform pairs
  - Six PWM outputs to operate in several topologies
  - Configurable dead time on rising and falling edges; each set up independently
  - Modulating of PWM output by high-frequency carrier signals, useful when gate drivers are insulated with a transformer
- Capture module for hardware-based signal processing
  - Speed measurement of rotating machinery
  - Measurement of elapsed time between position sensor pulses
  - Period and duty cycle measurement of pulse train signals
  - Decoding current or voltage amplitude derived from duty-cycle-encoded signals of current/voltage sensors
  - Three individual capture channels, each of which with a 32-bit time-stamp register
  - Selection of edge polarity and prescaling of input capture signals
  - The capture timer can sync with a PWM timer or external signals
- Fault Detection module
  - Programmable fault handling in both cycle-by-cycle mode and one-shot mode
  - A fault condition can force the PWM output to either high or low logic levels
- Event generation and task response achieved by the Event Task Matrix (ETM)

Pin Assignment

For details, see *ESP32-C6 Series Datasheet* > Section *Peripheral Pin Assignment*.

5.2.1.11 Remote Control Peripheral

The Remote Control Peripheral (RMT) controls the transmission and reception of infrared remote control signals.

Feature List

- Four channels for sending and receiving infrared remote control signals
- Independent transmission and reception capabilities for each channel
- Support for Normal TX/RX mode, Wrap TX/RX mode, Continuous TX mode
- Modulation on TX pulses and Demodulation on RX pulses
- RX filtering for improved signal reception

- Ability to transmit data simultaneously on multiple channels
- Clock divider counter, state machine, and receiver for each RX channel
- Default allocation of RAM blocks to channels based on channel number
- RAM containing 16-bit entries with "level" and "period" fields

Pin Assignment

For details, see *ESP32-C6 Series Datasheet* > Section *Peripheral Pin Assignment*.

5.2.1.12 Parallel IO Controller

The Parallel IO Controller (PARLIO) in the ESP32-C6 chip enables data transfer between external devices and internal memory on a parallel bus through GDMA. It consists of a transmitter (TX unit) and a receiver (RX unit), making it a versatile interface for connecting various peripherals.

Feature List

- 1/2/4/8/16-bit configurable data bus width
- Half-duplex communication with 16-bit data bus width and full-duplex communication with 8-bit data bus width
- Bit reordering in 1/2/4-bit data bus width mode
- RX unit supports 15 receive modes categorized into three major categories: Level Enable mode, Pulse Enable mode, and Software Enable mode
- TX unit can generate a valid signal aligned with TX

Pin Assignment

For details, see *ESP32-C6 Series Datasheet* > Section *Peripheral Pin Assignment*.

5.2.2 Analog Signal Processing

This subsection describes components on the chip that sense and process real-world data.

5.2.2.1 SAR ADC

ESP32-C6 integrates a Successive Approximation Analog-to-Digital Converter (SAR ADC) to convert analog signals into digital representations.

Feature List

- 12-bit sampling resolution
- Analog voltage sampling from up to seven pins
- Attenuation of input signals for voltage conversion
- Software-triggered one-time sampling
- Timer-triggered multi-channel scanning

- DMA continuous conversion for seamless data transfer
- Two filters with configurable filter coefficient
- Threshold monitoring which helps to trigger an interrupt
- Support for Event Task Matrix

Pin Assignment

For details, see *ESP32-C6 Series Datasheet* > Section *Peripheral Pin Assignment*.

5.2.2.2 Temperature Sensor

The Temperature Sensor in the ESP32-C6 chip allows for real-time monitoring of temperature changes inside the chip.

Feature List

- Measurement range: −40°C ~ 125°C
- Software triggering, wherein the data can be read continuously once triggered
- Hardware automatic triggering and temperature monitoring
- Configurable temperature offset based on the environment to improve the accuracy
- Adjustable measurement range
- Two automatic monitoring wake-up modes: absolute value mode and incremental value mode
- Support for Event Task Matrix

6 Electrical Characteristics

6.1 Absolute Maximum Ratings

Stresses above those listed in Table 11 *Absolute Maximum Ratings* may cause permanent damage to the device. These are stress ratings only and functional operation of the device at these or any other conditions beyond those indicated under Table 12 *Recommended Operating Conditions* is not implied. Exposure to absolute-maximum-rated conditions for extended periods may affect device reliability.

Table 11: Absolute Maximum Ratings

Symbol	Parameter	Min	Max	Unit
VDD33	Power supply voltage	−0.3	3.6	V
T_{STORE}	Storage temperature	−40	105	°C

6.2 Recommended Operating Conditions

Table 12: Recommended Operating Conditions

Symbol	Parameter		Min	Typ	Max	Unit
VDD33	Power supply voltage		3.0	3.3	3.6	V
I_{VDD}	Current delivered by external power supply		0.5	—	—	A
T_A	Operating ambient temperature	85 °C version	−40	—	85	°C
		105 °C version			105	

6.3 DC Characteristics (3.3 V, 25 °C)

Table 13: DC Characteristics (3.3 V, 25 °C)

Symbol	Parameter	Min	Typ	Max	Unit
C_{IN}	Pin capacitance	—	2	—	pF
V_{IH}	High-level input voltage	0.75 × VDD[1]	—	VDD[1] + 0.3	V
V_{IL}	Low-level input voltage	−0.3	—	0.25 × VDD[1]	V
I_{IH}	High-level input current	—	—	50	nA
I_{IL}	Low-level input current	—	—	50	nA
V_{OH}[2]	High-level output voltage	0.8 × VDD[1]	—	—	V
V_{OL}[2]	Low-level output voltage	—	—	0.1 × VDD[1]	V
I_{OH}	High-level source current (VDD[1] = 3.3 V, V_{OH} >= 2.64 V, PAD_DRIVER = 3)	—	40	—	mA
I_{OL}	Low-level sink current (VDD[1] = 3.3 V, V_{OL} = 0.495 V, PAD_DRIVER = 3)	—	28	—	mA
R_{PU}	Pull-up resistor	—	45	—	kΩ
R_{PD}	Pull-down resistor	—	45	—	kΩ
V_{IH_nRST}	Chip reset release voltage	0.75 × VDD[1]	—	VDD[1] + 0.3	V
V_{IL_nRST}	Chip reset voltage	−0.3	—	0.25 × VDD[1]	V

[1] VDD is the I/O voltage for pins of a particular power domain.

[2] V_{OH} and V_{OL} are measured using high-impedance load.

6.4 Current Consumption Characteristics

6.4.1 Current Consumption in Active Mode

The current consumption measurements are taken with a 3.3 V supply at 25 °C ambient temperature.

TX current consumption is rated at a 100% duty cycle.

RX current consumption is rated when the peripherals are disabled and the CPU idle.

Table 14: Current Consumption for Wi-Fi (2.4 GHz) in Active Mode

Work Mode	RF Condition	Description	Peak (mA)
Active (RF working)	TX	802.11b, 1 Mbps, DSSS @ 20.5 dBm	382
		802.11g, 54 Mbps, OFDM @ 19.0 dBm	316
		802.11n, HT20, MCS7 @ 18.0 dBm	295
		802.11n, HT40, MCS7 @ 17.5 dBm	280
		802.11ax, MCS9 @ 15.5 dBm	251
	RX	802.11b/g/n, HT20	78
		802.11n, HT40	82
		802.11ax, HE20	78

Table 15: Current Consumption for Bluetooth LE in Active Mode

Work Mode	RF Condition	Description	Peak (mA)
Active (RF working)	TX	Bluetooth LE @ 19.0 dBm	309
		Bluetooth LE @ 9.0 dBm	189
		Bluetooth LE @ 0 dBm	131
		Bluetooth LE @ –16.0 dBm	94
	RX	Bluetooth LE	73

Table 16: Current Consumption for 802.15.4 in Active Mode

Work Mode	RF Condition	Description	Peak (mA)
Active (RF working)	TX	802.15.4 @ 19.0 dBm	305
		802.15.4 @ 12.0 dBm	190
		802.15.4 @ 0 dBm	120
		802.15.4 @ –16.0 dBm	86
	RX	802.15.4	73

Note:
The content below is excerpted from *Section Current Consumption in Other Modes* in *ESP32-C6 Series Datasheet*.

6.4.2 Current Consumption in Other Modes

Table 17: Current Consumption in Modem-sleep Mode

Mode	CPU Frequency (MHz)	Description	Typ (mA)	
			All Peripherals Clocks Disabled	All Peripherals Clocks Enabled [1]
Modem-sleep [2,3]	160	CPU is running	27	38
		CPU is idle	17	28
	80	CPU is running	19	30
		CPU is idle	14	25

[1] In practice, the current consumption might be different depending on which peripherals are enabled.

[2] In Modem-sleep mode, Wi-Fi is clock gated.

[3] In Modem-sleep mode, the consumption might be higher when accessing flash.

Table 18: Current Consumption in Low-Power Modes

Mode	Description	Typ (μA)
Light-sleep	CPU and wireless communication modules are powered down, peripheral clocks are disabled, and all GPIOs are high-impedance	180
	CPU, wireless communication modules and peripherals are powered down, and all GPIOs are high-impedance	35
Deep-sleep	RTC timer and LP memory are powered on	7
Power off	CHIP_PU is set to low level, the chip is powered off	1

7 RF Characteristics

This section contains tables with RF characteristics of the Espressif product.

The RF data is measured at the antenna port, where RF cable is connected, including the front-end loss. The external antennas used for the tests on the modules with external antenna connectors have an impedance of 50 Ω.Devices should operate in the center frequency range allocated by regional regulatory authorities. The target center frequency range and the target transmit power are configurable by software. See ESP RF Test Tool and Test Guide for instructions.

Unless otherwise stated, the RF tests are conducted with a 3.3 V (±5%) supply at 25 °C ambient temperature.

7.1 Wi-Fi Radio

Table 19: Wi-Fi RF Characteristics

Name	Description
Center frequency range of operating channel	2412 ~ 2484 MHz
Wi-Fi wireless standard	IEEE 802.11b/g/n/ax

7.1.1 Wi-Fi RF Transmitter (TX) Characteristics

Table 20: TX Power with Spectral Mask and EVM Meeting 802.11 Standards

Rate	Min (dBm)	Typ (dBm)	Max (dBm)
802.11b, 1 Mbps, DSSS	—	20.5	—
802.11b, 11 Mbps, CCK	—	20.5	—
802.11g, 6 Mbps, OFDM	—	19.5	—
802.11g, 54 Mbps, OFDM	—	18.5	—
802.11n, HT20, MCS0	—	18.5	—
802.11n, HT20, MCS7	—	17.5	—
802.11n, HT40, MCS0	—	18.0	—
802.11n, HT40, MCS7	—	17.0	—
802.11ax, HE20, MCS0	—	18.5	—
802.11ax, HE20, MCS9	—	14.0	—

Table 21: TX EVM Test[1]

Rate	Min (dB)	Typ (dB)	Limit (dB)
802.11b, 1 Mbps, DSSS	—	–25.0	–10.0
802.11b, 11 Mbps, CCK	—	–25.0	–10.0
802.11g, 6 Mbps, OFDM	—	–24.0	–5.0

Cont'd on next page

Table 21 – cont'd from previous page

Rate	Min (dB)	Typ (dB)	Limit (dB)
802.11g, 54 Mbps, OFDM	—	–28.0	–25.0
802.11n, HT20, MCS0	—	–27.5	–5.0
802.11n, HT20, MCS7	—	–30.0	–27.0
802.11n, HT40, MCS0	—	–27.0	–5.0
802.11n, HT40, MCS7	—	–29.5	–27.0
802.11ax, HE20, MCS0	—	–27.0	–5.0
802.11ax, HE20, MCS9	—	–34.0	–32.0

[1] EVM is measured at the corresponding typical TX power provided in Table *20 TX Power with Spectral Mask and EVM Meeting 802.11 Standards* above.

7.1.2 Wi-Fi RF Receiver (RX) Characteristics

For RX tests, the PER (packet error rate) limit is 8% for 802.11b, and 10% for 802.11g/n/ax.

Table 22: RX Sensitivity

Rate	Min (dBm)	Typ (dBm)	Max (dBm)
802.11b, 1 Mbps, DSSS	—	–99.0	—
802.11b, 2 Mbps, DSSS	—	–96.0	—
802.11b, 5.5 Mbps, CCK	—	–93.2	—
802.11b, 11 Mbps, CCK	—	–89.4	—
802.11g, 6 Mbps, OFDM	—	–94.0	—
802.11g, 9 Mbps, OFDM	—	–92.6	—
802.11g, 12 Mbps, OFDM	—	–92.0	—
802.11g, 18 Mbps, OFDM	—	–89.4	—
802.11g, 24 Mbps, OFDM	—	–86.4	—
802.11g, 36 Mbps, OFDM	—	–82.6	—
802.11g, 48 Mbps, OFDM	—	–78.0	—
802.11g, 54 Mbps, OFDM	—	–77.0	—
802.11n, HT20, MCS0	—	–93.6	—
802.11n, HT20, MCS1	—	–91.8	—
802.11n, HT20, MCS2	—	–88.8	—
802.11n, HT20, MCS3	—	–85.6	—
802.11n, HT20, MCS4	—	–82.8	—
802.11n, HT20, MCS5	—	–78.0	—
802.11n, HT20, MCS6	—	–76.6	—
802.11n, HT20, MCS7	—	–75.0	—
802.11n, HT40, MCS0	—	–91.0	—
802.11n, HT40, MCS1	—	–88.6	—
802.11n, HT40, MCS2	—	–85.6	—

Cont'd on next page

Table 22 – cont'd from previous page

Rate	Min (dBm)	Typ (dBm)	Max (dBm)
802.11n, HT40, MCS3	—	–82.6	—
802.11n, HT40, MCS4	—	–79.0	—
802.11n, HT40, MCS5	—	–74.8	—
802.11n, HT40, MCS6	—	–73.0	—
802.11n, HT40, MCS7	—	–71.8	—
802.11ax, HE20, MCS0	—	–93.8	—
802.11ax, HE20, MCS1	—	–91.0	—
802.11ax, HE20, MCS2	—	–87.4	—
802.11ax, HE20, MCS3	—	–85.0	—
802.11ax, HE20, MCS4	—	–81.4	—
802.11ax, HE20, MCS5	—	–77.0	—
802.11ax, HE20, MCS6	—	–76.0	—
802.11ax, HE20, MCS7	—	–74.4	—
802.11ax, HE20, MCS8	—	–70.4	—
802.11ax, HE20, MCS9	—	–68.2	—

Table 23: Maximum RX Level

Rate	Min (dBm)	Typ (dBm)	Max (dBm)
802.11b, 1 Mbps, DSSS	—	5	—
802.11b, 11 Mbps, CCK	—	5	—
802.11g, 6 Mbps, OFDM	—	5	—
802.11g, 54 Mbps, OFDM	—	0	—
802.11n, HT20, MCS0	—	5	—
802.11n, HT20, MCS7	—	0	—
802.11n, HT40, MCS0	—	5	—
802.11n, HT40, MCS7	—	0	—
802.11ax, HE20, MCS0	—	5	—
802.11ax, HE20, MCS9	—	0	—

Table 24: RX Adjacent Channel Rejection

Rate	Min (dB)	Typ (dB)	Max (dB)
802.11b, 1 Mbps, DSSS	—	38	—
802.11b, 11 Mbps, CCK	—	38	—
802.11g, 6 Mbps, OFDM	—	31	—
802.11g, 54 Mbps, OFDM	—	20	—
802.11n, HT20, MCS0	—	31	—

Cont'd on next page

Table 24 – cont'd from previous page

Rate	Min (dB)	Typ (dB)	Max (dB)
802.11n, HT20, MCS7	—	16	—
802.11n, HT40, MCS0	—	28	—
802.11n, HT40, MCS7	—	10	—
802.11ax, HE20, MCS0	—	25	—
802.11ax, HE20, MCS9	—	2	—

7.2 Bluetooth 5 (LE) Radio

Table 25: Bluetooth LE RF Characteristics

Name	Description
Center frequency range of operating channel	2402 ~ 2480 MHz
RF transmit power range	–16.0 ~ 19.0 dBm

7.2.1 Bluetooth LE RF Transmitter (TX) Characteristics

Table 26: Bluetooth LE - Transmitter Characteristics - 1 Mbps

Parameter	Description	Min	Typ	Max	Unit
Carrier frequency offset and drift	Max. $\lvert f_n \rvert_{n=0,\,1,\,2,\,3,\,\ldots k}$	—	1.3	—	kHz
	Max. $\lvert f_0 - f_n \rvert_{n=2,\,3,\,4,\,\ldots k}$	—	1.5	—	kHz
	Max. $\lvert f_n - f_{n-5} \rvert_{n=6,\,7,\,8,\,\ldots k}$	—	0.9	—	kHz
	$\lvert f_1 - f_0 \rvert$	—	0.6	—	kHz
Modulation characteristics	$\Delta\, F1_{\text{avg}}$	—	249.9	—	kHz
	Min. $\Delta\, F2_{\text{max}}$ (for at least 99.9% of all $\Delta\, F2_{\text{max}}$)	—	212.1	—	kHz
	$\Delta\, F2_{\text{avg}} / \Delta\, F1_{\text{avg}}$	—	0.88	—	—
In-band emissions	± 2 MHz offset	—	–29	—	dBm
	± 3 MHz offset	—	–36	—	dBm
	> ± 3 MHz offset	—	–39	—	dBm

Table 27: Bluetooth LE - Transmitter Characteristics - 2 Mbps

Parameter	Description	Min	Typ	Max	Unit
Carrier frequency offset and drift	Max. $\lvert f_n \rvert_{n=0,\,1,\,2,\,3,\,\ldots k}$	—	2.2	—	kHz
	Max. $\lvert f_0 - f_n \rvert_{n=2,\,3,\,4,\,\ldots k}$	—	1.1	—	kHz
	Max. $\lvert f_n - f_{n-5} \rvert_{n=6,\,7,\,8,\,\ldots k}$	—	1.1	—	kHz
	$\lvert f_1 - f_0 \rvert$	—	0.5	—	kHz
Modulation characteristics	$\Delta\, F1_{\text{avg}}$	—	499.4	—	kHz

Cont'd on next page

Table 27 – cont'd from previous page

Parameter	Description	Min	Typ	Max	Unit
	Min. $\Delta F2_{max}$ (for at least 99.9% of all $\Delta F2_{max}$)	–	443.5	–	kHz
	$\Delta F2_{avg}/\Delta F1_{avg}$	–	0.95	–	–
In-band emissions	± 4 MHz offset	–	–40	–	dBm
	± 5 MHz offset	–	–41	–	dBm
	> ± 5 MHz offset	–	–42	–	dBm

Table 28: Bluetooth LE - Transmitter Characteristics - 125 Kbps

Parameter	Description	Min	Typ	Max	Unit
Carrier frequency offset and drift	Max. $\lvert f_n \rvert_{n=0,\,1,\,2,\,3,\,\ldots k}$	–	0.7	–	kHz
	Max. $\lvert f_0 - f_n \rvert_{n=1,\,2,\,3,\,\ldots k}$	–	0.3	–	kHz
	$\lvert f_0 - f_3 \rvert$	–	0.1	–	kHz
	Max. $\lvert f_n - f_{n-3} \rvert_{n=7,\,8,\,9,\,\ldots k}$	–	0.4	–	kHz
Modulation characteristics	$\Delta F1_{avg}$	–	250.0	–	kHz
	Min. $\Delta F1_{max}$ (for at least 99.9% of all $\Delta F1_{max}$)	–	238.0	–	kHz
In-band emissions	± 2 MHz offset	–	–29	–	dBm
	± 3 MHz offset	–	–36	–	dBm
	> ± 3 MHz offset	–	–39	–	dBm

Table 29: Bluetooth LE - Transmitter Characteristics - 500 Kbps

Parameter	Description	Min	Typ	Max	Unit
Carrier frequency offset and drift	Max. $\lvert f_n \rvert_{n=0,\,1,\,2,\,3,\,\ldots k}$	–	0.5	–	kHz
	Max. $\lvert f_0 - f_n \rvert_{n=1,\,2,\,3,\,\ldots k}$	–	0.3	–	kHz
	$\lvert f_0 - f_3 \rvert$	–	0.1	–	kHz
	Max. $\lvert f_n - f_{n-3} \rvert_{n=7,\,8,\,9,\,\ldots k}$	–	0.4	–	kHz
Modulation characteristics	$\Delta F2_{avg}$	–	230.7	–	kHz
	Min. $\Delta F2_{max}$ (for at least 99.9% of all $\Delta F2_{max}$)	–	217.6	–	kHz
In-band emissions	± 2 MHz offset	–	–28	–	dBm
	± 3 MHz offset	–	–36	–	dBm
	> ± 3 MHz offset	–	–39	–	dBm

7.2.2 Bluetooth LE RF Receiver (RX) Characteristics

Table 30: Bluetooth LE - Receiver Characteristics - 1 Mbps

Parameter	Description	Min	Typ	Max	Unit
Sensitivity @30.8% PER	–	–	–98.0	–	dBm
Maximum received signal @30.8% PER	–	–	8	–	dBm

Cont'd on next page

Table 30 – cont'd from previous page

Parameter		Description	Min	Typ	Max	Unit
C/I and receiver selectivity performance	Co-channel	F = F0 MHz	—	7	—	dB
	Adjacent channel	F = F0 + 1 MHz	—	4	—	dB
		F = F0 – 1 MHz	—	3	—	dB
		F = F0 + 2 MHz	—	–21	—	dB
		F = F0 – 2 MHz	—	–22	—	dB
		F = F0 + 3 MHz	—	–28	—	dB
		F = F0 – 3 MHz	—	–36	—	dB
		F ≥ F0 + 4 MHz	—	–27	—	dB
		F ≤ F0 – 4 MHz	—	–36	—	dB
	Image frequency	—	—	–26	—	dB
	Adjacent channel to image frequency	F = F_{image} + 1 MHz	—	–29	—	dB
		F = F_{image} – 1 MHz	—	–28	—	dB
Out-of-band blocking performance		30 MHz ~ 2000 MHz	—	–16	—	dBm
		2003 MHz ~ 2399 MHz	—	–24	—	dBm
		2484 MHz ~ 2997 MHz	—	–16	—	dBm
		3000 MHz ~ 12.75 GHz	—	–1	—	dBm
Intermodulation		—	—	–27	—	dBm

Table 31: Bluetooth LE - Receiver Characteristics - 2 Mbps

Parameter		Description	Min	Typ	Max	Unit
Sensitivity @30.8% PER		—	—	–95.0	—	dBm
Maximum received signal @30.8% PER		—	—	8	—	dBm
C/I and receiver selectivity performance	Co-channel	F = F0 MHz	—	8	—	dB
	Adjacent channel	F = F0 + 2 MHz	—	3	—	dB
		F = F0 – 2 MHz	—	2	—	dB
		F = F0 + 4 MHz	—	–23	—	dB
		F = F0 – 4 MHz	—	–25	—	dB
		F = F0 + 6 MHz	—	–31	—	dB
		F = F0 – 6 MHz	—	–35	—	dB
		F ≥ F0 + 8 MHz	—	–36	—	dB
		F ≤ F0 – 8 MHz	—	–36	—	dB
	Image frequency	—	—	–23	—	dB
	Adjacent channel to image frequency	F = F_{image} + 2 MHz	—	–30	—	dB
		F = F_{image} – 2 MHz	—	3	—	dB
Out-of-band blocking performance		30 MHz ~ 2000 MHz	—	–18	—	dBm
		2003 MHz ~ 2399 MHz	—	–28	—	dBm
		2484 MHz ~ 2997 MHz	—	–16	—	dBm
		3000 MHz ~ 12.75 GHz	—	–1	—	dBm
Intermodulation		—	—	–29	—	dBm

Table 32: Bluetooth LE - Receiver Characteristics - 125 Kbps

Parameter		Description	Min	Typ	Max	Unit
Sensitivity @30.8% PER		—	—	–105.5	—	dBm
Maximum received signal @30.8% PER		—	—	8	—	dBm
C/I and receiver selectivity performance	Co-channel	F = F0 MHz	—	2	—	dB
	Adjacent channel	F = F0 + 1 MHz	—	–1	—	dB
		F = F0 – 1 MHz	—	–3	—	dB
		F = F0 + 2 MHz	—	–31	—	dB
		F = F0 – 2 MHz	—	–27	—	dB
		F = F0 + 3 MHz	—	–33	—	dB
		F = F0 – 3 MHz	—	–42	—	dB
		F ≥ F0 + 4 MHz	—	–31	—	dB
		F ≤ F0 – 4 MHz	—	–48	—	dB
	Image frequency	—	—	–31	—	dB
	Adjacent channel to image frequency	F = F_{image} + 1 MHz	—	–36	—	dB
		F = F_{image} – 1 MHz	—	–33	—	dB

Table 33: Bluetooth LE - Receiver Characteristics - 500 Kbps

Parameter		Description	Min	Typ	Max	Unit
Sensitivity @30.8% PER		—	—	–101.5	—	dBm
Maximum received signal @30.8% PER		—	—	8	—	dBm
C/I and receiver selectivity performance	Co-channel	F = F0 MHz	—	4	—	dB
	Adjacent channel	F = F0 + 1 MHz	—	1	—	dB
		F = F0 – 1 MHz	—	–1	—	dB
		F = F0 + 2 MHz	—	–23	—	dB
		F = F0 – 2 MHz	—	–24	—	dB
		F = F0 + 3 MHz	—	–33	—	dB
		F = F0 – 3 MHz	—	–41	—	dB
		F ≥ F0 + 4 MHz	—	–31	—	dB
		F ≤ F0 – 4 MHz	—	–41	—	dB
	Image frequency	—	—	–30	—	dB
	Adjacent channel to image frequency	F = F_{image} + 1 MHz	—	–35	—	dB
		F = F_{image} – 1 MHz	—	–27	—	dB

7.3 802.15.4 Radio

Table 34: 802.15.4 RF Characteristics

Name	Description
Center frequency range of operating channel	2405 ~ 2480 MHz

[1] Zigbee in the 2.4 GHz range supports 16 channels at 5 MHz spacing from channel 11 to channel 26.

7.3.1 802.15.4 RF Transmitter (TX) Characteristics

Table 35: 802.15.4 Transmitter Characteristics - 250 Kbps

Parameter	Min	Typ	Max	Unit
RF transmit power range	–16.0	—	19.0	dBm
EVM	—	13%	—	—

7.3.2 802.15.4 RF Receiver (RX) Characteristics

Table 36: 802.15.4 Receiver Characteristics - 250 Kbps

Parameter		Description	Min	Typ	Max	Unit
Sensitivity @1% PER		—	—	–104.0	—	dBm
Maximum received signal @1% PER		—	—	8	—	dBm
Relative jamming level	Adjacent channel	F = F0 + 5 MHz	—	27	—	dB
		F = F0 – 5 MHz	—	32	—	dB
	Alternate channel	F = F0 + 10 MHz	—	47	—	dB
		F = F0 – 10 MHz	—	50	—	dB

8 Module Schematics

This is the reference design of the module.

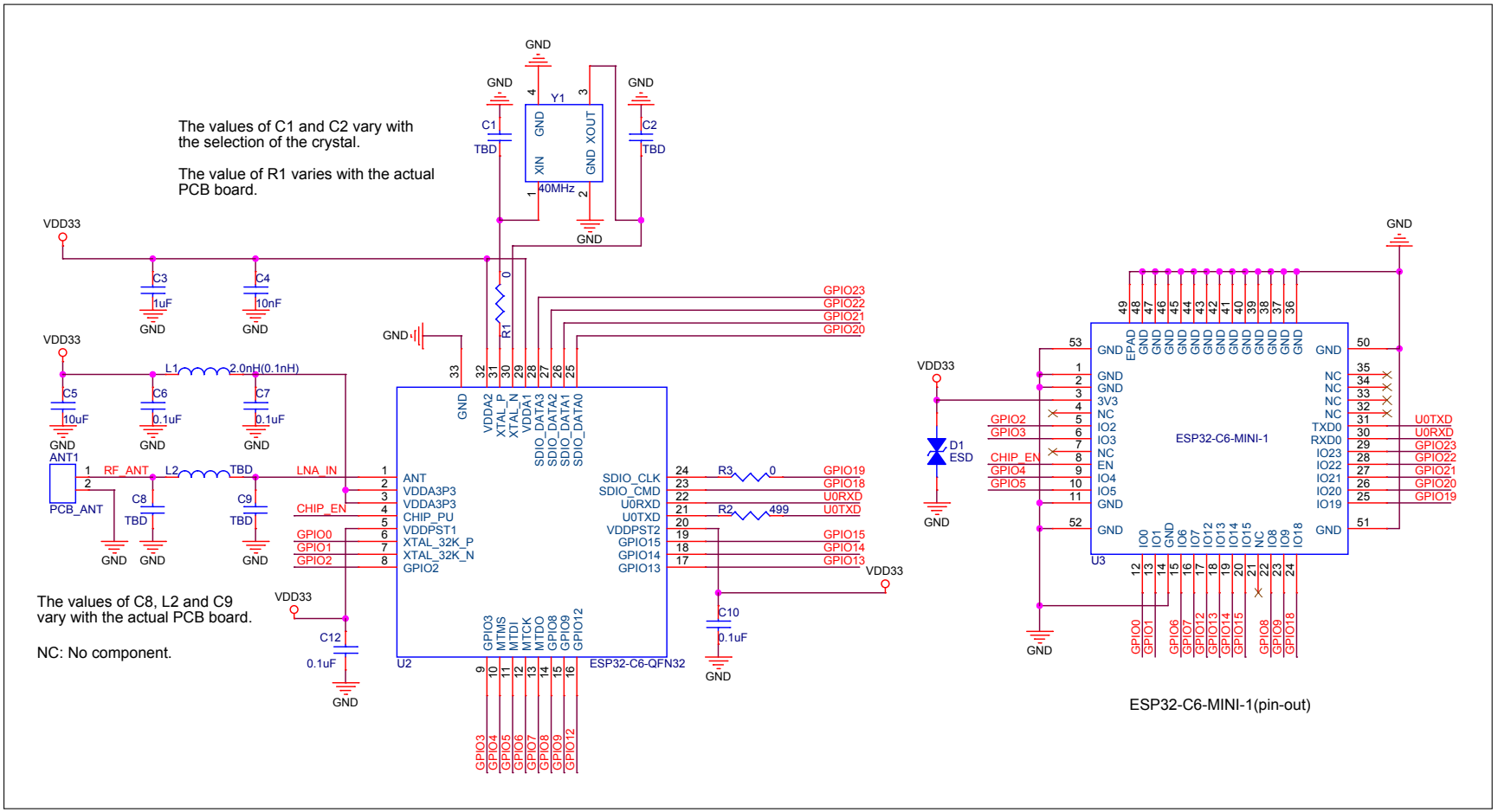

Figure 5: ESP32-C6-MINI-1 Schematics

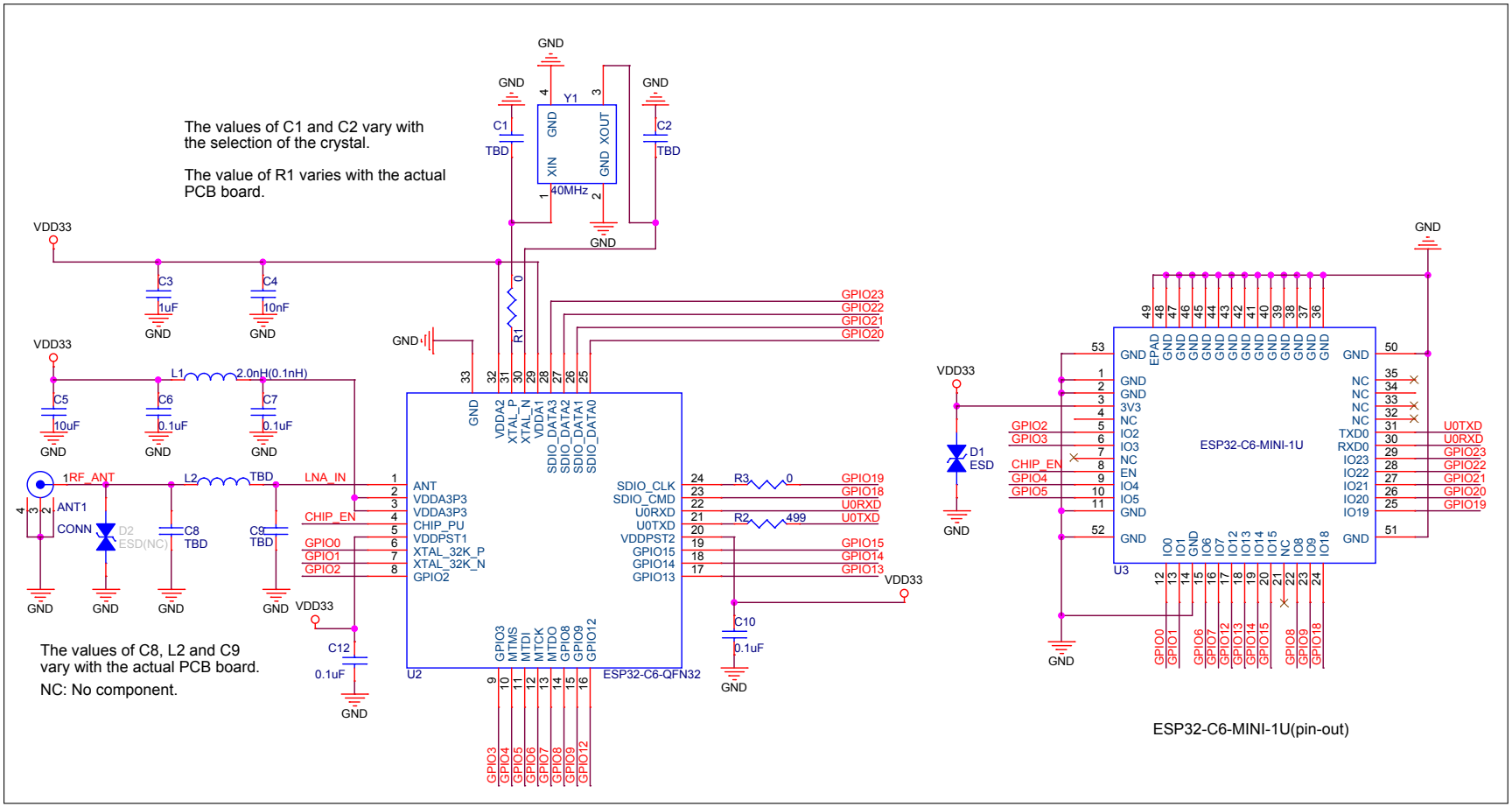

Figure 6: ESP32-C6-MINI-1U Schematics

9 Peripheral Schematics

This is the typical application circuit of the module connected with peripheral components (for example, power supply, antenna, reset button, JTAG interface, and UART interface).

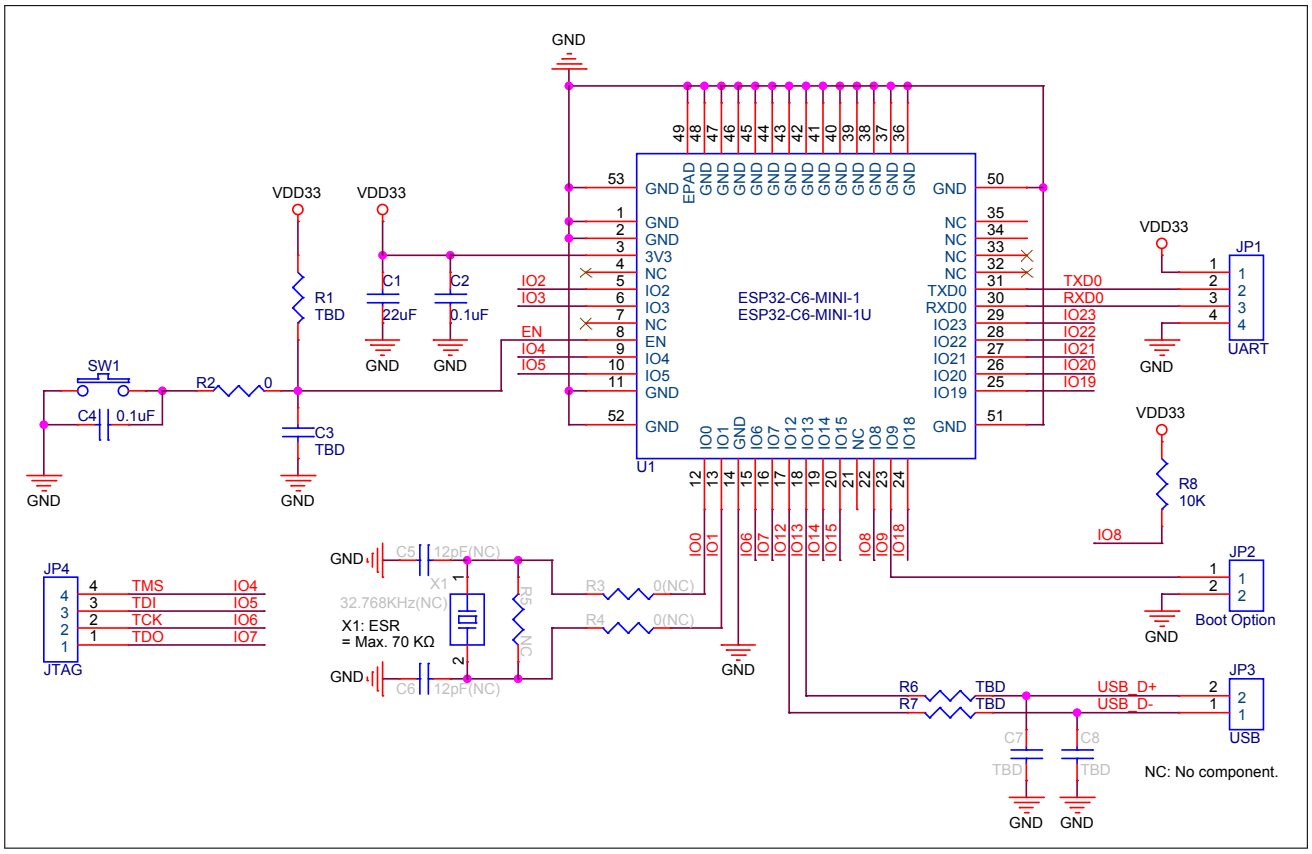

Figure 7: Peripheral Schematics

- Soldering the EPAD to the ground of the base board is not a must, however, it can optimize thermal performance. If you choose to solder it, please apply the correct amount of soldering paste. Too much soldering paste may increase the gap between the module and the baseboard. As a result, the adhesion between other pins and the baseboard may be poor.
- To ensure that the power supply to the ESP32-C6 chip is stable during power-up, it is advised to add an RC delay circuit at the EN pin. The recommended setting for the RC delay circuit is usually R = 10 kΩ and C = 1 μF. However, specific parameters should be adjusted based on the power-up timing of the module and the power-up and reset sequence timing of the chip. For ESP32-C6's power-up and reset sequence timing diagram, please refer to *ESP32-C6 Series Datasheet* > Section *Power Supply*.

10 Physical Dimensions

10.1 Module Dimensions

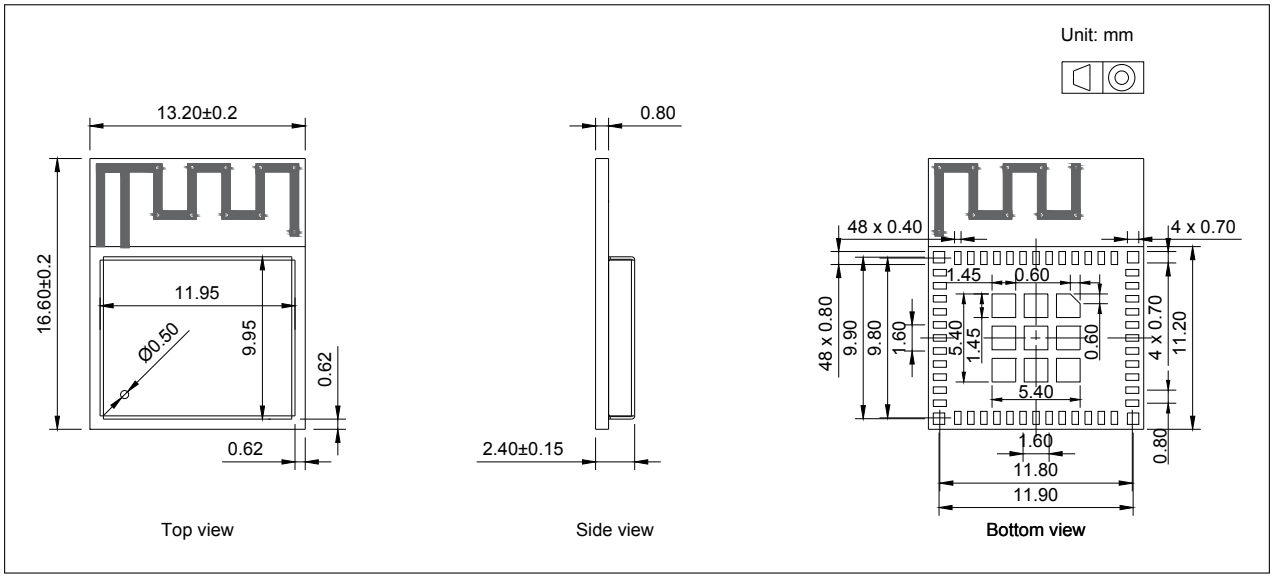

Figure 8: ESP32-C6-MINI-1 Physical Dimensions

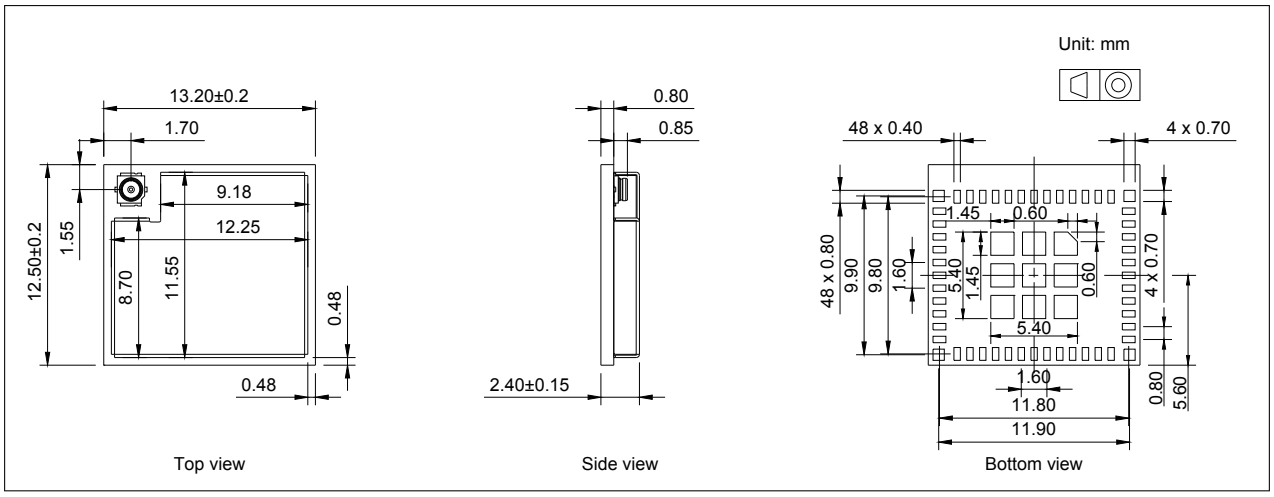

Figure 9: ESP32-C6-MINI-1U Physical Dimensions

Note:

For information about tape, reel, and product marking, please refer to *Espressif Module Packaging Information*.

10.2 Dimensions of External Antenna Connector

ESP32-C6-MINI-1U uses the third generation external antenna connector as shown in Figure 10 *Dimensions of External Antenna Connector*. This connector is compatible with the following connectors:

- W.FL Series connector from Hirose
- MHF III connector from I-PEX
- AMMC connector from Amphenol

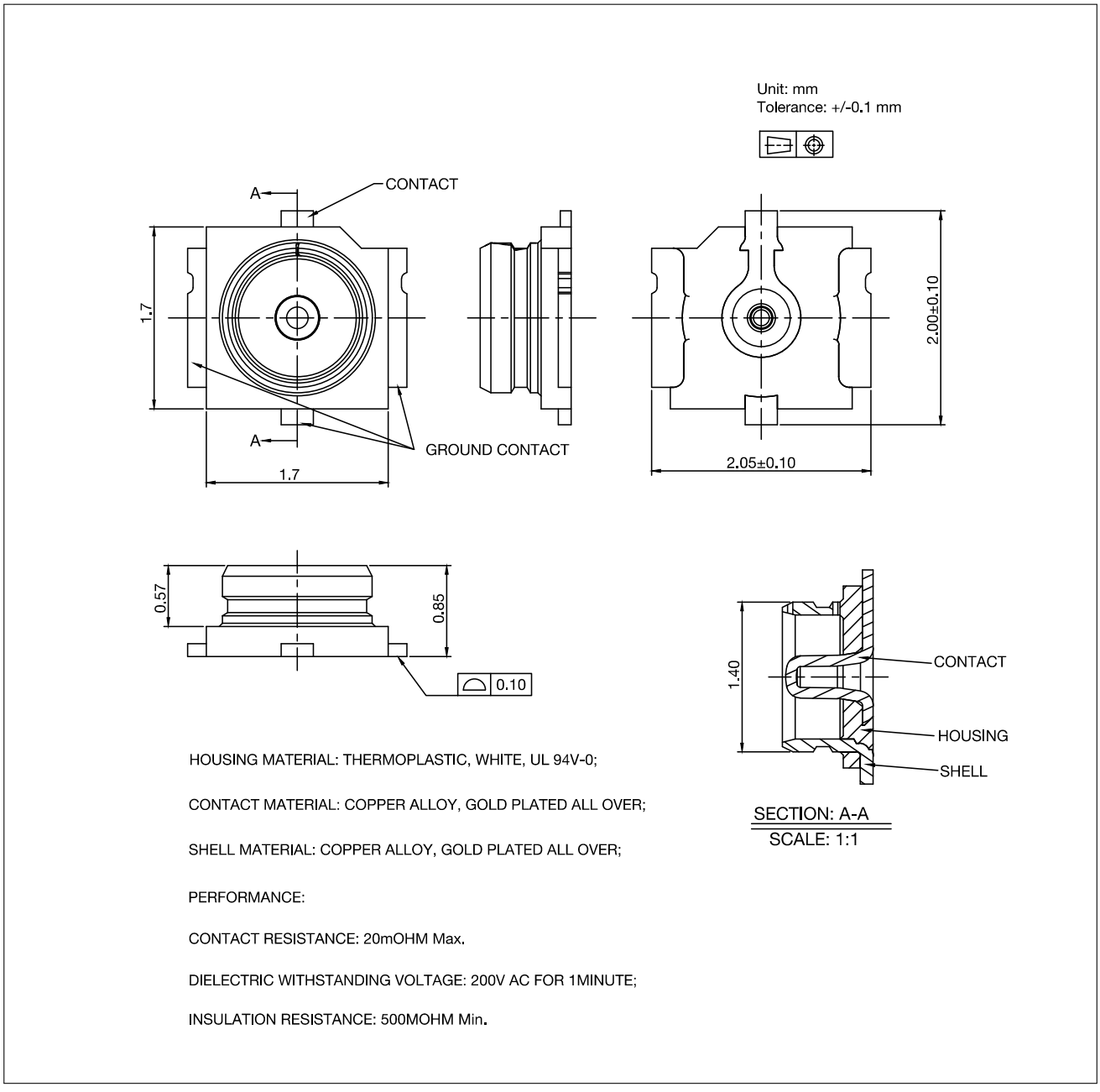

Figure 10: Dimensions of External Antenna Connector

11 PCB Layout Recommendations

11.1 PCB Land Pattern

This section provides the following resources for your reference:

- Figures for recommended PCB land patterns with all the dimensions needed for PCB design. See Figure 11 *ESP32-C6-MINI-1 Recommended PCB Land Pattern* and Figure 12 *ESP32-C6-MINI-1U Recommended PCB Land Pattern*.
- Source files of recommended PCB land patterns to measure dimensions not covered in Figure 11 and Figure 12. You can view the source files for ESP32-C6-MINI-1 and ESP32-C6-MINI-1U with Autodesk Viewer.
- 3D models of ESP32-C6-MINI-1 and ESP32-C6-MINI-1U. Please make sure that you download the 3D model file in .STEP format (beware that some browsers might add .txt).

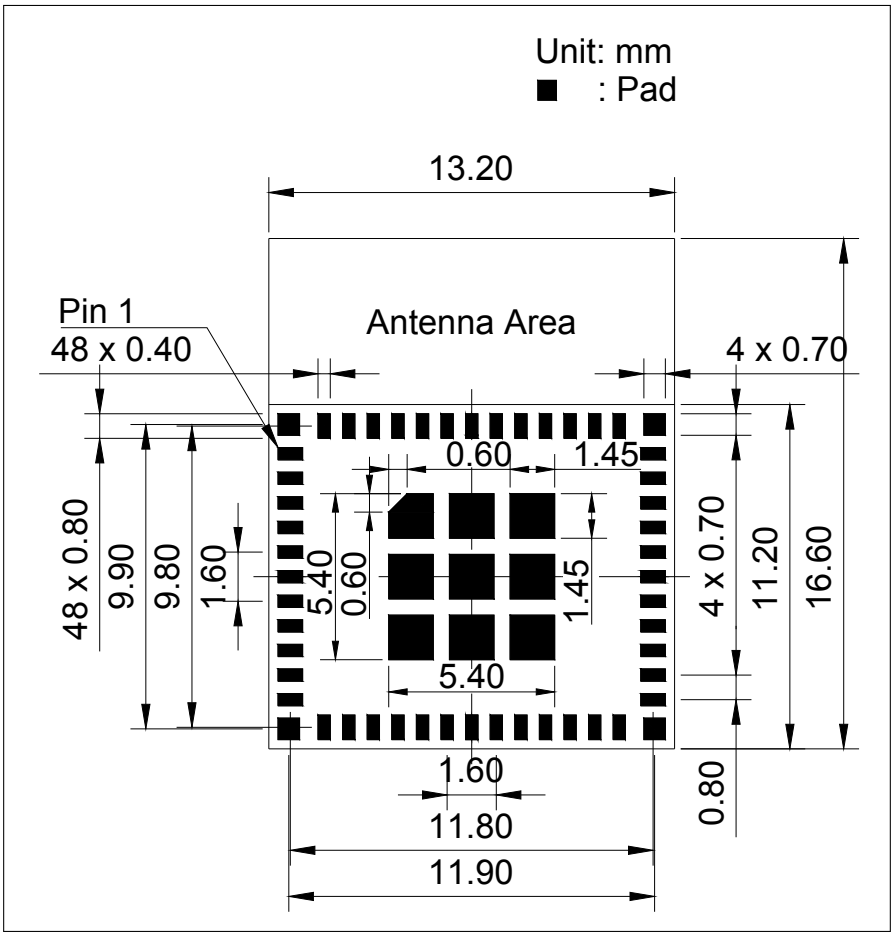

Figure 11: ESP32-C6-MINI-1 Recommended PCB Land Pattern

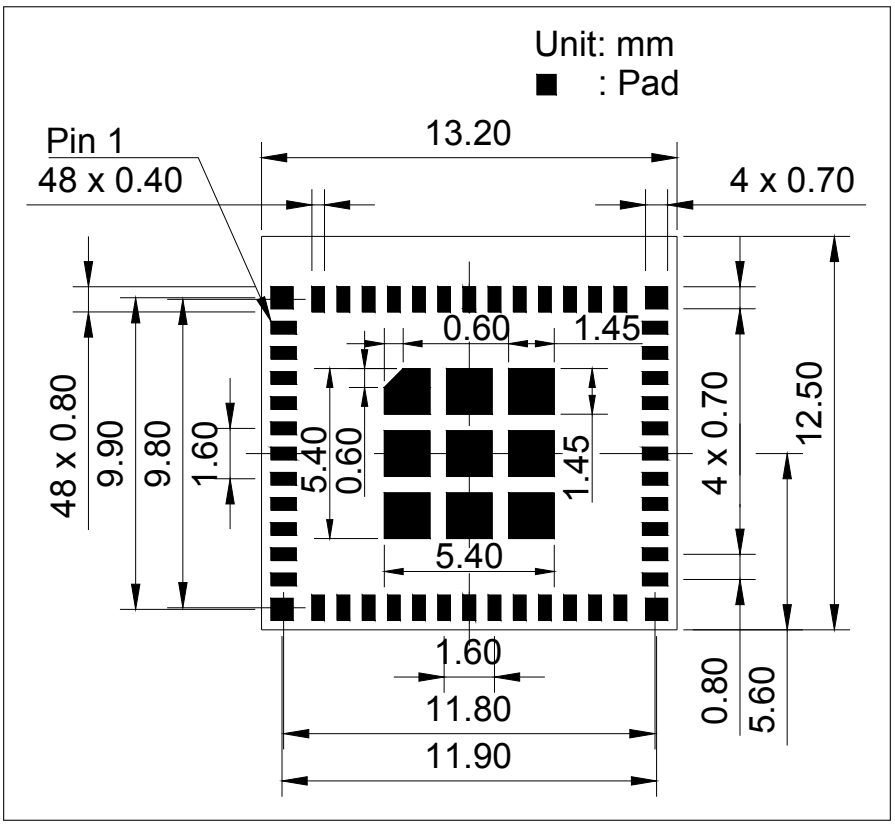

Figure 12: ESP32-C6-MINI-1U Recommended PCB Land Pattern

11.2 Module Placement for PCB Design

If module-on-board design is adopted, attention should be paid while positioning the module on the base board. The interference of the base board on the module's antenna performance should be minimized.

For details about module placement for PCB design, please refer to *ESP32-C6 Hardware Design Guidelines* > Section *Positioning a Module on a Base Board*.

12 Product Handling

12.1 Storage Conditions

The products sealed in moisture barrier bags (MBB) should be stored in a non-condensing atmospheric environment of < 40 °C and 90%RH. The module is rated at the moisture sensitivity level (MSL) of 3.

After unpacking, the module must be soldered within 168 hours with the factory conditions 25±5 °C and 60%RH. If the above conditions are not met, the module needs to be baked.

12.2 Electrostatic Discharge (ESD)

- Human body model (HBM): ±2000 V
- Charged-device model (CDM): ±500 V

12.3 Reflow Profile

Solder the module in a single reflow.

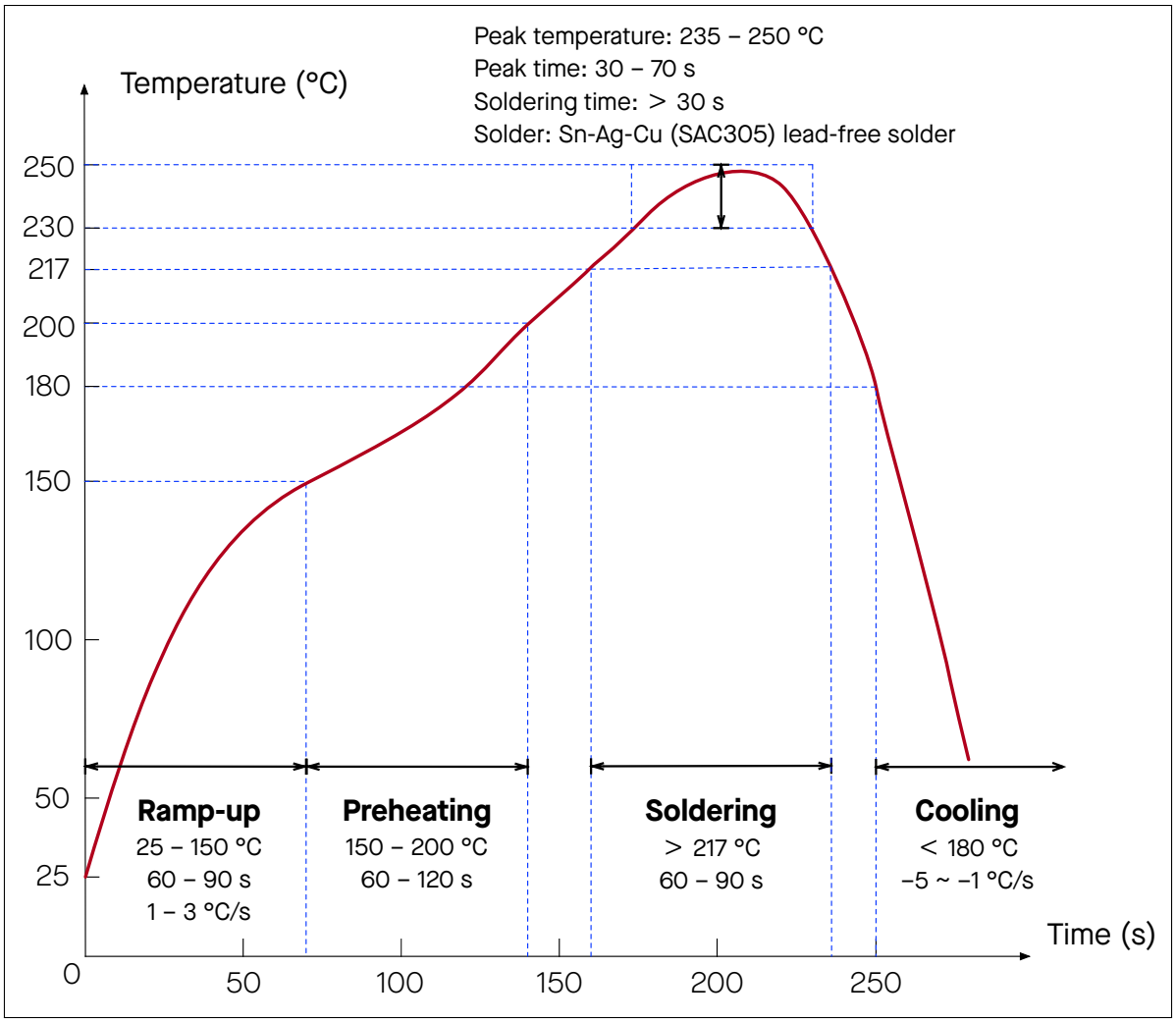

Figure 13: Reflow Profile

12.4 Ultrasonic Vibration

Avoid exposing Espressif modules to vibration from ultrasonic equipment, such as ultrasonic welders or ultrasonic cleaners. This vibration may induce resonance in the in-module crystal and lead to its malfunction or even failure. As a consequence, **the module may stop working or its performance may deteriorate**.

Related Documentation and Resources

Related Documentation

- ESP32-C6 Series Datasheet – Specifications of the ESP32-C6 hardware.
- ESP32-C6 Technical Reference Manual – Detailed information on how to use the ESP32-C6 memory and peripherals.
- ESP32-C6 Hardware Design Guidelines – Guidelines on how to integrate the ESP32-C6 into your hardware product.
- *Certificates*
  https://espressif.com/en/support/documents/certificates
- *ESP32-C6 Product/Process Change Notifications (PCN)*
  https://espressif.com/en/support/documents/pcns?keys=ESP32-C6
- *Documentation Updates and Update Notification Subscription*
  https://espressif.com/en/support/download/documents

Developer Zone

- ESP-IDF Programming Guide for ESP32-C6 – Extensive documentation for the ESP-IDF development framework.
- *ESP-IDF* and other development frameworks on GitHub.
  https://github.com/espressif
- *ESP32 BBS Forum* – Engineer-to-Engineer (E2E) Community for Espressif products where you can post questions, share knowledge, explore ideas, and help solve problems with fellow engineers.
  https://esp32.com/
- *The ESP Journal* – Best Practices, Articles, and Notes from Espressif folks.
  https://blog.espressif.com/
- See the tabs *SDKs and Demos*, *Apps*, *Tools*, *AT Firmware*.
  https://espressif.com/en/support/download/sdks-demos

Products

- *ESP32-C6 Series SoCs* – Browse through all ESP32-C6 SoCs.
  https://espressif.com/en/products/socs?id=ESP32-C6
- *ESP32-C6 Series Modules* – Browse through all ESP32-C6-based modules.
  https://espressif.com/en/products/modules?id=ESP32-C6
- *ESP32-C6 Series DevKits* – Browse through all ESP32-C6-based devkits.
  https://espressif.com/en/products/devkits?id=ESP32-C6
- *ESP Product Selector* – Find an Espressif hardware product suitable for your needs by comparing or applying filters.
  https://products.espressif.com/#/product-selector?language=en

Contact Us

- See the tabs *Sales Questions*, *Technical Enquiries*, *Circuit Schematic & PCB Design Review*, *Get Samples* (Online stores), *Become Our Supplier*, *Comments & Suggestions*.
  https://espressif.com/en/contact-us/sales-questions

Revision History

Date	Version	Release notes
2025-03-21	v1.3	• In Chapter 1 *Module Overview*, renamed Section 1.2 *Description* to 1.2 *Series Comparison* • Improved the structure, formatting, and wording in: – Chapter 4 *Boot Configurations* (used to be Section 3.3 *Strapping Pins*) – Chapter 5 *Peripherals* (used to be Chapter 4 *Peripherals*) – Chapter 10 *Physical Dimensions* and Chapter 11 *PCB Layout Recommendations* (used to be Chapter 9 *Physical Dimensions and PCB Land Pattern*) • In Section 7.1 *Wi-Fi Radio*, updated data in Table 20 *TX Power with Spectral Mask and EVM Meeting 802.11 Standards* and Table 22 *RX Sensitivity* • Added Section 11.2 *Module Placement for PCB Design*
2024-08-20	v1.2	• In Section 1.1 *Features* and 1.2 *Series Comparison*, updated flash size from 4 MB to up to 8 MB flash • In Section 1.2 *Series Comparison*, added information about ESP32-C6-MINI-1-H8 and ESP32-C6-MINI-1U-H8, and added a table note about the maximum clock frequency supported by SPI flash • In Section 1.1 *Features*, 1.2 *Series Comparison*, and 5.1 *Peripheral Overview*, added information about ESP32-C6FH8
2024-01-19	v1.1	• In Section 1.1 *Features*, added information about certification and test • In Section 6.4.1 *Current Consumption in Active Mode*, updated the minimum RF transmit power for Bluetooth LE and 802.15.4 in active mode from -24 dBm to -16 dBm, and updated the maximum power from 20 dBm to 19 dBm • In Chapter 7 *RF Characteristics*, updated the RF transmit power range for Bluetooth LE and 802.15.4 from -24 ~ 20 dBm to -16 ~ 19 dBm • In Section 11 *PCB Layout Recommendations*, added information about the recommended PCB land pattern of ESP32-C6-MINI-1U module, and 3D models of ESP32-C6-MINI-1 and ESP32-C6-MINI-1U modules
2023-06-27	v1.0	• Added Chapter 5 *Peripherals* and removed peripheral-related information from 1.2 *Series Comparison* • Updated Table 8 *ESP32-C6-MINI-1 Physical Dimensions* and Table 9 *ESP32-C6-MINI-1U Physical Dimensions* to change the tolerance in the top view from 0.25 to 0.2
2023-04-17	v0.6	Added information about ESP32-C6-MINI-1U module
2023-02-16	v0.5	Preliminary release



Disclaimer and Copyright Notice

Information in this document, including URL references, is subject to change without notice.

ALL THIRD PARTY'S INFORMATION IN THIS DOCUMENT IS PROVIDED AS IS WITH NO WARRANTIES TO ITS AUTHENTICITY AND ACCURACY.

NO WARRANTY IS PROVIDED TO THIS DOCUMENT FOR ITS MERCHANTABILITY, NON-INFRINGEMENT, FITNESS FOR ANY PARTICULAR PURPOSE, NOR DOES ANY WARRANTY OTHERWISE ARISING OUT OF ANY PROPOSAL, SPECIFICATION OR SAMPLE.

All liability, including liability for infringement of any proprietary rights, relating to use of information in this document is disclaimed. No licenses express or implied, by estoppel or otherwise, to any intellectual property rights are granted herein.

The Wi-Fi Alliance Member logo is a trademark of the Wi-Fi Alliance. The Bluetooth logo is a registered trademark of Bluetooth SIG.

All trade names, trademarks and registered trademarks mentioned in this document are property of their respective owners, and are hereby acknowledged.

Copyright © 2025 Espressif Systems (Shanghai) Co., Ltd. All rights reserved.

www.espressif.com