4.8MM PCB MOUNT MALE SPADE TERMINAL – STRAIGHT

Quick Disconnect Terminal for PCB Applications

Technical Datasheet
Rev. 1.0 – Nov. 2025



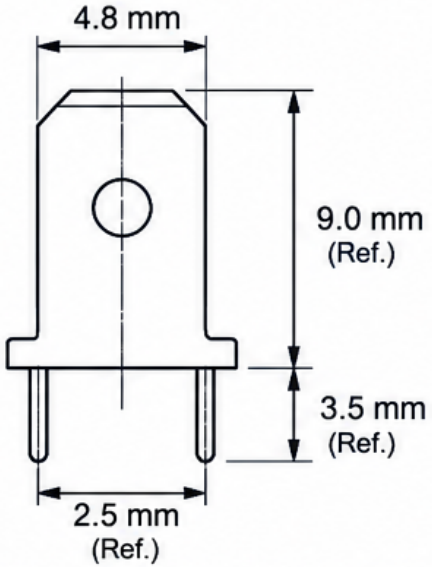

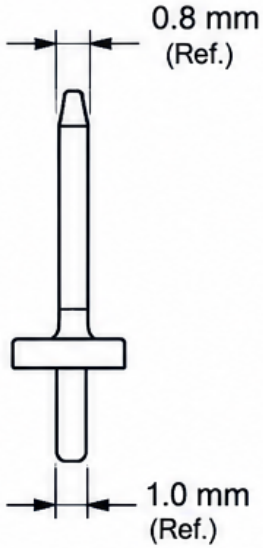

PCB Mounting Layout

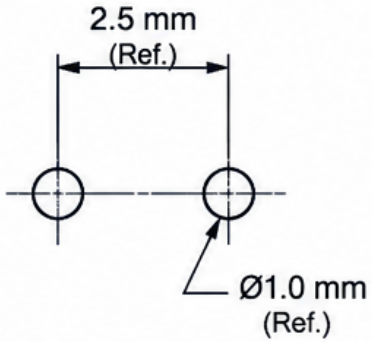

1. General Description

A straight male spade terminal designed for direct PCB mounting. It provides a reliable electrical connection between a printed circuit board (PCB) and a compatible 4.8 mm female quick-disconnect terminal.

2. Features

- 4.8 mm standard male spade interface
- Straight terminal configuration
- PCB mounting design
- Compatible with standard 4.8 mm female quick-disconnect connectors
- Suitable for direct board-level electrical connections

3. Applications

- Power connections on printed circuit boards
- Electrical appliance connections
- Industrial control equipment
- Power supply connections
- Internal wiring and PCB interconnections

4. General Specifications

Product Type	Male Spade Terminal
Terminal Gender	Male
Contact Width	4.8 mm
Mounting Type	PCB Mount
Terminal Orientation	Straight
Connection Type	Quick Disconnect
PCB Mounting Method	Through Hole
Compatible Connector	4.8 mm Female Spade Terminal

5. Mechanical Specifications

Blade Width	4.8 mm
Blade Thickness	0.8 mm (Ref.)
Overall Length	Not Specified
Pin Pitch	2.5 mm (Ref.)
Pin Diameter	1.0 mm (Ref.)
Mounting Configuration	Straight
Material	Not Specified
Plating	Not Specified

6. Electrical Specifications

Rated Voltage	Not Specified
Rated Current	Not Specified
Contact Resistance	Not Specified
Insulation Resistance	Not Specified
Dielectric Withstanding Voltage	Not Specified

7. Ordering Information

Product Name	4.8MM PCB MOUNT MALE SPADE TERMINAL – STRAIGHT
Product Category	PCB Terminals / Quick Disconnect Terminals
Document Type	Technical Datasheet
Revision	1.0

Note: Electrical ratings, material specifications and detailed dimensions must be confirmed by the manufacturer or through product testing.

Dimensions: mm