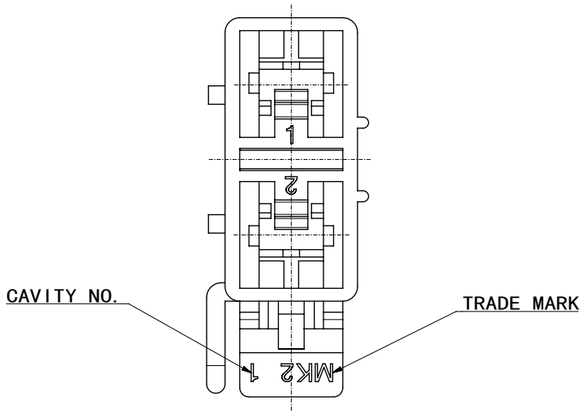

NOTE
1. MATERIAL & COLOR : SEE TABLE
2. MATED HOSUING : 35180-*40* / 35180-*60*
3. APPLICABLE TERMINAL : 35745-0*10
4. MATED TPA : 35965-029*
5. PRODUCT SPECIFICATION : PS 351800400 / 351800600
6. PACKAGING SPECIFICATION : PK-35965-001

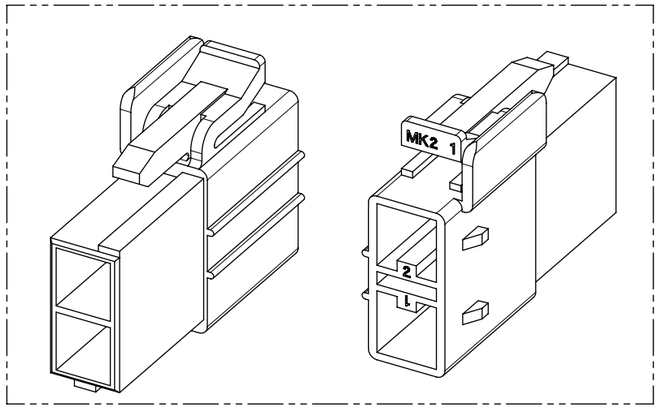

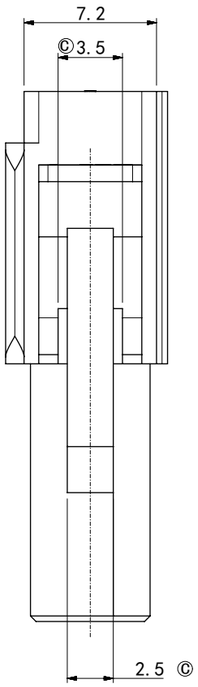

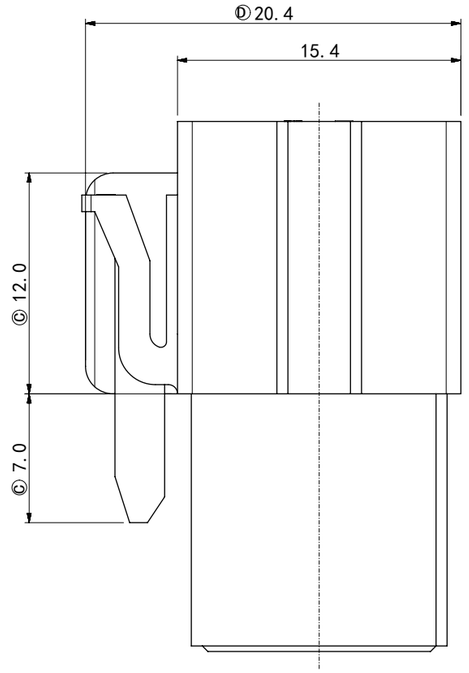

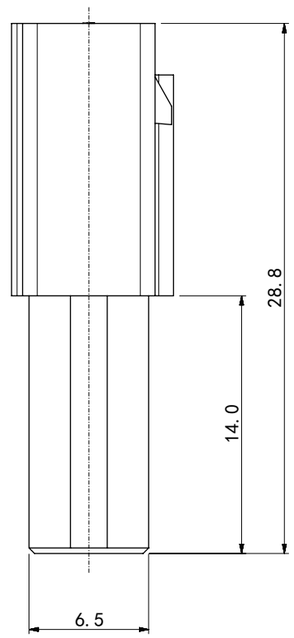

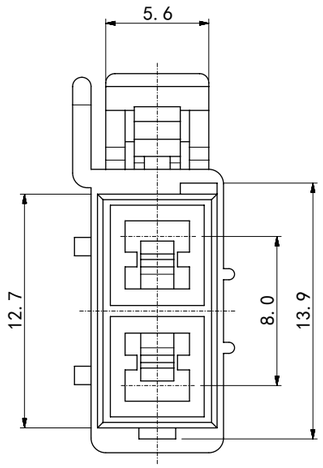

NO.	POLYESTER(PBT)		© PET/PC (UL94V-0)	
	MATERIAL	COLOR	MATERIAL	COLOR
1	35965-0210	NATURAL	35965-9210	NATURAL
2	35965-0212	RED	35965-9212	RED
3	35965-0213	YELLOW	35965-9213	YELLOW
4	35965-0214	BLUE	35965-9214	BLUE

SYMBOLS: E A = 0; E C = 0; E F = 0; S = 0; ▼ = 0; C = 0; ☒ = 0; ■ = 0; ▽ = 0

THIS DRAWING CONTAINS INFORMATION THAT IS PROPRIETARY TO MOLEX ELECTRONIC TECHNOLOGIES, LLC AND SHOULD NOT BE USED WITHOUT WRITTEN PERMISSION

DIMENSION UNITS	SCALE
mm	3:1

GENERAL TOLERANCES (UNLESS SPECIFIED)

ANGULAR TOL	±	1.0°
4 PLACES	±	
3 PLACES	±	
2 PLACES	±	
1 PLACE	±	0.3
0 PLACES	±	0.3

DRAFT WHERE APPLICABLE MUST REMAIN WITHIN DIMENSIONS

CURRENT REV DESC:

EC NO: 177777
DRWN: JSSHIN 2018/06/08
CHK'D: SHCHU 2018/06/08
APPR: YSKIM02 2018/06/08

INITIAL REVISION:
DRWN: SCHONG03 2017/12/15
APPR: YSKIM02 2018/06/08

THIRD ANGLE PROJECTION | DRAWING: A3-SIZE | SERIES: 35965

molex

.070 MULTI FEMALE HSG -2P (B-TYPE)

PRODUCT CUSTOMER DRAWING

DOCUMENT NUMBER	DOC TYPE	DOC PART	REVISION
359659210	PSD	000	E

MATERIAL NUMBER	CUSTOMER	SHEET NUMBER
SEE TABLE	GENERAL MARKET	1 OF 1

DOCUMENT STATUS	P1	RELEASE DATE	2018/06/08 03:11:42

FORMAT: master-lb-prod-A3
REVISION: H
DATE: 2018/01/18