JIANGSU CHANGJIANG ELECTRONICS TECHNOLOGY CO., LTD

SOT-23 Plastic-Encapsulate Diodes

MMBD1501A LOW LEAKAGE DIODE

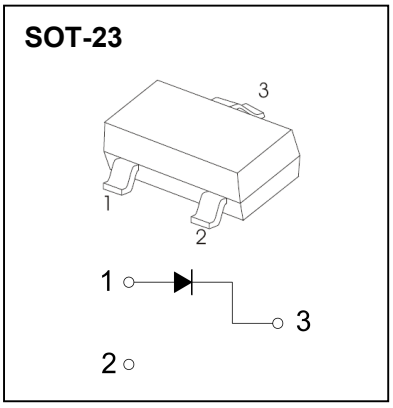

FEATURES

- Low Leakage
- High Conductance

MARKING: A11

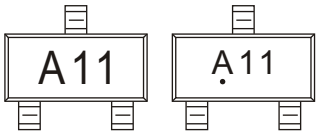

Solid dot = Green molding compound device,if none,the normal device.

MAXIMUM RATINGS (T_a=25℃ unless otherwise noted)

Symbol	Parameter	Value	Unit
V_R	DC Blocking Voltage	200	V
I_O	Continuous Forward Current	200	mA
I_{FM}	Peak Forward Current	700	mA
I_{FSM}	Non-repetitive Peak Forward Surge Current @t=8.3ms	2.0	A
P_D	Power Dissipation	350	mW
$R_{\theta JA}$	Thermal Resistance from Junction to Ambient	357	℃/W
T_j	Junction Temperature	150	℃
T_{stg}	Storage Temperature	-55~+150	℃

ELECTRICAL CHARACTERISTICS(T_a=25℃ unless otherwise specified)

Parameter	Symbol	Test conditions	Min	Typ	Max	Unit
Reverse voltage	$V_{(BR)}$	I_R=5μA	200			V
Reverse current	I_R	V_R=180V			10	nA
Forward voltage	V_F	I_F=1mA			0.75	V
		I_F=10mA			0.85	
		I_F=50mA			0.95	
		I_F=100mA			1.1	
		I_F=200mA			1.3	
		I_F=300mA			1.5	
Total capacitance	C_{tot}	V_R=0V,f=1MHz			4	pF

Typical Characteristics

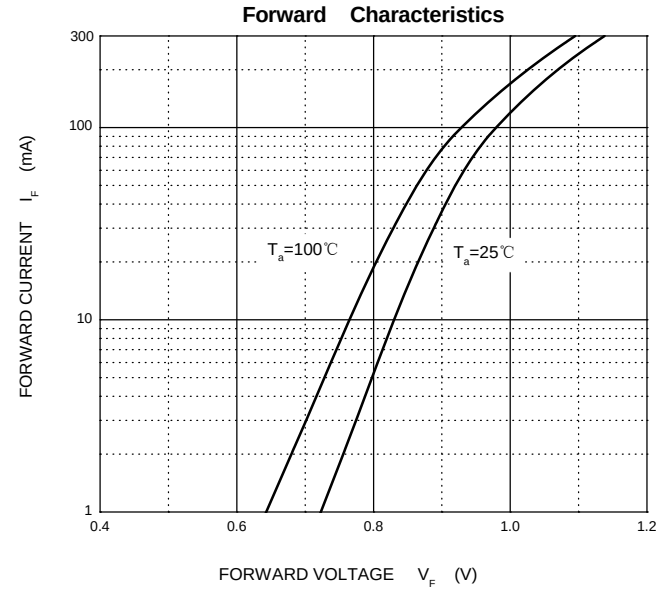

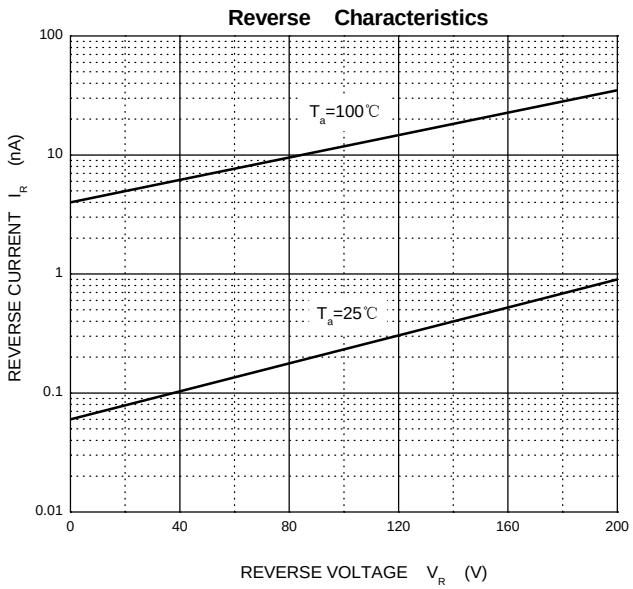

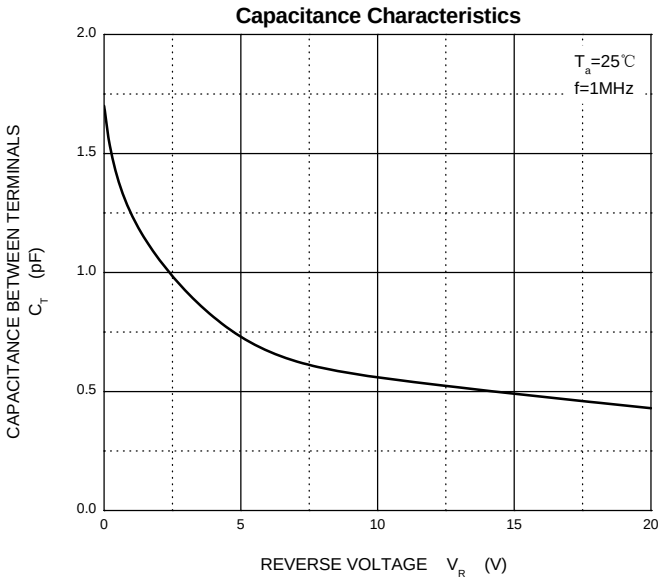

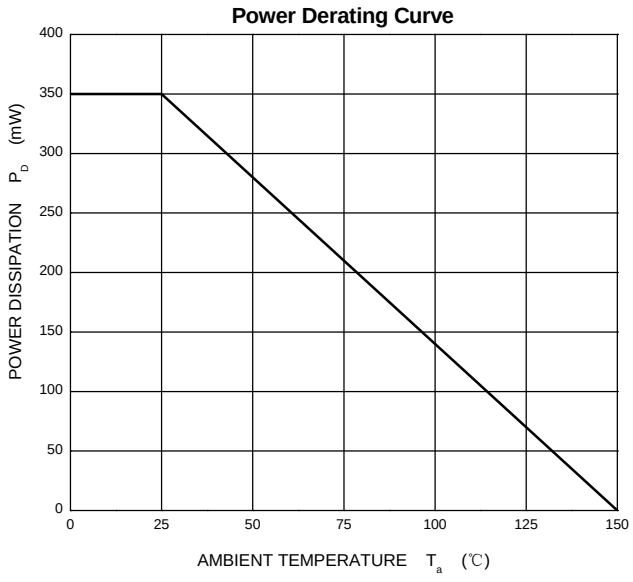

SOT-23 Package Outline Dimensions

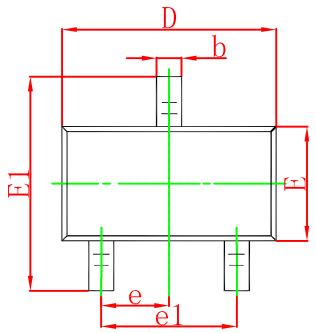

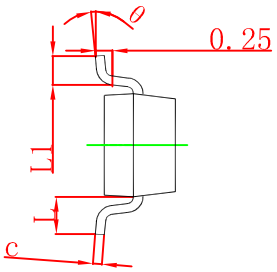

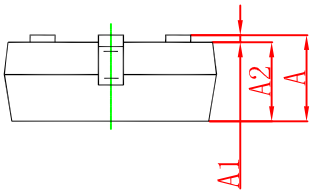

Symbol	Dimensions In Millimeters		Dimensions In Inches	
	Min	Max	Min	Max
A	0.900	1.150	0.035	0.045
A1	0.000	0.100	0.000	0.004
A2	0.900	1.050	0.035	0.041
b	0.300	0.500	0.012	0.020
c	0.080	0.150	0.003	0.006
D	2.800	3.000	0.110	0.118
E	1.200	1.400	0.047	0.055
E1	2.250	2.550	0.089	0.100
e	0.950 TYP		0.037 TYP	
e1	1.800	2.000	0.071	0.079
L	0.550 REF		0.022 REF	
L1	0.300	0.500	0.012	0.020
θ	0°	8°	0°	8°

SOT-23 Suggested Pad Layout

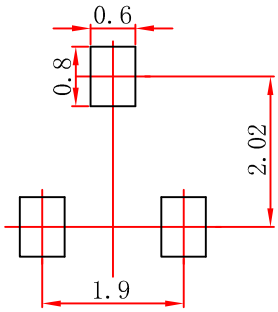

Note:
1.Controlling dimension:in millimeters.
2.General tolerance:± 0.05mm.
3.The pad layout is for reference purposes only.

NOTICE

JCET reserve the right to make modifications,enhancements, improvements, corrections or other changes without further notice to any product herein.JCET does not assume any liability arising out of the application or use of any product described herein.

SOT-23 Embossed Carrier Tape

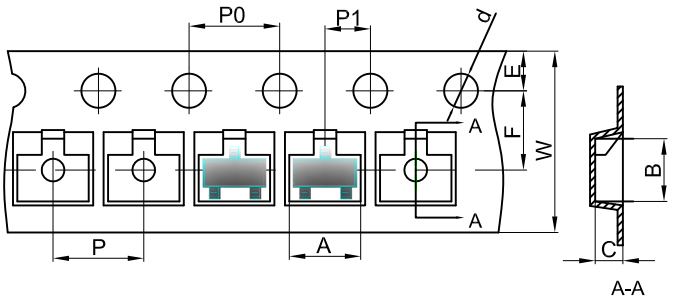

Packaging Description:

SOT-23 parts are shipped in tape. The carrier tape is made from a dissipative (carbon filled) polycarbonate resin. The cover tape is a multilayer film (Heat Activated Adhesive in nature) primarily composed of polyester film, adhesive layer, sealant, and anti-static sprayed agent. These reeled parts in standard option are shipped with 3,000 units per 7" or 17.8cm diameter reel. The reels are clear in color and is made of polystyrene plastic (anti-static coated).

Dimensions are in millimeter										
Pkg type	A	B	C	d	E	F	P0	P	P1	W
SOT-23	3.15	2.77	1.22	Ø1.50	1.75	3.50	4.00	4.00	2.00	8.00

SOT-23 Tape Leader and Trailer

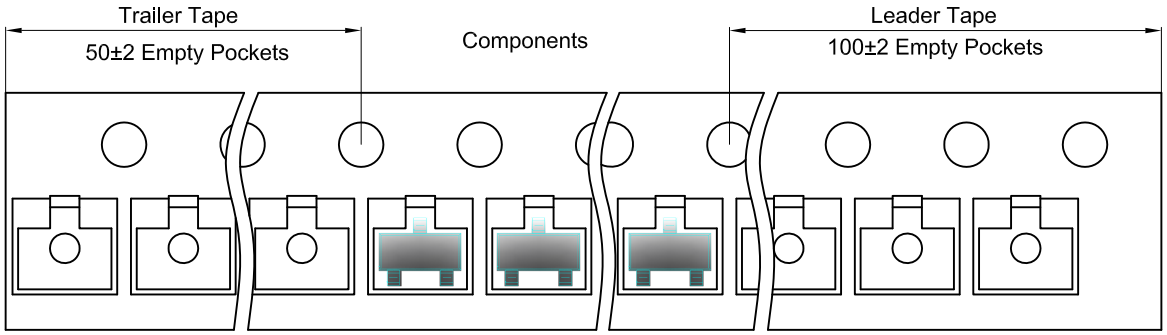

SOT-23 Reel

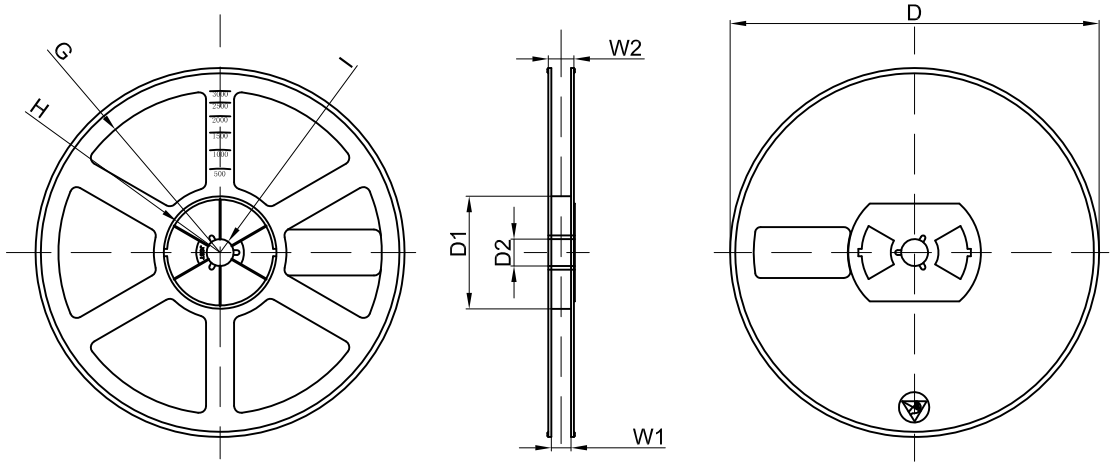

Dimensions are in millimeter								
Reel Option	D	D1	D2	G	H	I	W1	W2
7"Dia	Ø178.00	54.40	13.00	R78.00	R25.60	R6.50	9.50	12.30

REEL	Reel Size	Box	Box Size(mm)	Carton	Carton Size(mm)	G.W.(kg)
3000 pcs	7 inch	45,000 pcs	203×203×195	180,000 pcs	438×438×220	